SMART COLUMBUS

Connected Vehicle Environment (CVE) System Design Document (SDD)

for the Smart Columbus Demonstration Program

DRAFT | May 29, 2019

Produced by City of Columbus

Notice

This document is disseminated under the sponsorship of the Department of Transportation in the interest of information exchange. The United States Government assumes no liability for its contents or use thereof.

The U.S. Government is not endorsing any manufacturers, products, or services cited herein and any trade name that may appear in the work has been included only because it is essential to the contents of the work.

Acknowledgement of Support

This material is based upon work supported by the U.S. Department of Transportation under Agreement No. DTFH6116H00013.

Disclaimer

Any opinions, findings, and conclusions or recommendations expressed in this publication are those of the Author(s) and do not necessarily reflect the view of the U.S. Department of Transportation.

Table of Contents

Chapter 1. Introduction 1

1.1. Project Background 1

1.2. References 3

1.3. Functional System Overview 4

Chapter 2. Design Stakeholders 7

2.1. Vehicle Operator 7

2.2. Department of Public Service 7

2.3. Central Ohio Transit Authority 7

2.4. Department of Technology 8

2.5. OBU System Integrator 8

2.6. RSU System Integrator 8

2.7. RSU Installation Contractor 8

Chapter 3. Design Concerns 9

3.1. Positional Accuracy 9

Chapter 4. System Decomposition 11

4.1. Roadside Unit 11

4.1.1. Physical/Mechanical 11

4.1.2. Firmware 11

4.1.3. System Monitoring 14

4.1.4. Message Handler 14

4.1.5. Service Channel Plan 15

4.2. Onboard Unit 15

4.2.1. Physical/Mechanical 15

4.2.2. Firmware 22

4.3. Traffic Signal Controller / Signal Cabinet 25

4.3.1. Physical/Mechanical 25

4.3.2. Signal Operations 27

4.4. Network Design 29

4.4.1. IP Allocation: 29

4.4.2. Circuit Type/Speed: 29

4.5. Applications 31

4.5.1. Vehicle-To-Vehicle Safety Applications 31

4.5.2. Red Light Violation Warning 35

4.5.3. Reduced Speed School Zone 40
4.5.4. Traffic Signal Priority/Preemption 43
4.5.5. Vehicle Data for Traffic Operations (VDTO) 45
4.5.6. Transit Vehicle Interaction Event Recording 46
4.6. Connected Vehicle Messages 49
4.6.1. Basic Safety Message 49
4.6.2. Signal Phase and Timing 51
4.6.3. MapData Message 53
4.6.4. Radio Technical Commission for Maritime Services Corrections (RTCM) Message 56
4.6.5. Roadside Safety Message 56
4.6.6. Signal Request Message 57
4.6.7. Signal Status Message 58
4.6.8. Wave Service Announcement 59

Chapter 5. Design Rationale 61

Appendix A. Acronyms and Definitions 63

Appendix B. Glossary 67

Appendix C. Requirements Traceability Matrix 69

Appendix D. Signal Priority and Preemption Strategies 79
D.1 Type of Strategies 79
D.2 Expected Movements 79
D.3 Time of Day 80
D.4 Approach 80
D.5 Time Between Successive Requests 81

Appendix E. Map Message Generation Process 83
E.1 Using the Spreadsheet-Based Tool 84
E.1.1 Intersection Information 84
E.1.2 Lane Properties 85
E.1.3 Lane Points 86
E.1.4 Connections 88
E.2 Save File Generation, Inspection, and Encoding 88
E.3 Appendix A: ASCII Character Table 89
E.4 Appendix B: Intersection List 89
E.5 Appendix C: Lane ID Assignment Method 92

Appendix F. Product Sheets 95

Appendix G. Version History 117

List of Tables

Table 1: Connected Vehicle Environment Project Scope 2
Table 2. Onboard Unit Power Pinout 16
Table 3: List of RSUs that Broadcast SRMs 41
Table 4: BSM Part I Data Element Population 49
Table 5: BSM Part II Data Element Population 51
Table 6: MovementPhaseState Values 52
Table 7: Signal Request Message (SRM) Content 57
Table 8: Signal Status Message 59
Table 9: PrioritizationResponseStatus Enumeration 59
Table 10: Channel Map for DSRC Messages 60
Table 11: Acronym List 63
Table 12: Glossary 67
Table 13: Appendix B: Intersection List 89
Table 14: Lane ID Ranges for Each Approach Group 93
Table 15: Version History 117

List of Figures

Figure 1. Physical View of the Smart Columbus Connected Vehicle Environment 5
Figure 1. Onboard Unit 16
Figure 2. Front View of Electrical Connectors 17
Figure 3. Rear View of Electrical Connectors 17
Figure 4: Touchscreen Display Controls 18
Figure 5: Touchscreen Display Interface Connections 19
Figure 6. Touchscreen Mounting Assembly 19
Figure 7. Digital Antenna 20
Figure 8. Wire Routing Example – Light-Duty Vehicle 21
Figure 9. Wire Routing Example – Sport Utility Vehicle 21
Figure 10. Wire Routing Example – Light-Duty Pickup Truck 21
Figure 11: Front Panel of Econolite Cobalt-C Controller 25
Figure 12: Econolite Cobalt Controller with CVCP Card Installed 26
Figure 13: Econolite CVCP Front Connectors 27
Figure 14. CVE Hi-Level Network Design 30
Figure 15: V2V Safety Sequence Diagram 31
Figure 16: Forward Collision Warning Example 33
Figure 17: Emergency Electronic Brake Light Warning Example 34
Figure 18: Lane Change Warning/Blind Spot Warning Example 35
Figure 19: MovementPhaseState Values ofTypical Signal State Progressions 37
Figure 20: Red Light Violation Warning Example 39
Figure 21: Red Light Violation Warning Sequence Diagram 40
Figure 22: Reduced Speed School Zone Example 42
Figure 23: Reduced Speed School Zone Sequence Diagram 43
Figure 24: Traffic Signal Priority Sequence Diagram 45

Figure 25: Vehicle Data for Traffic Operations Sequence Diagram 46
Figure 26: Transit Vehicle Interaction Event Recording Sequence Diagram 48
Figure 27: TimeChangeDetails Data Elements 52
Figure 28: MapData Message Visual Representation 54
Figure 29: Movement Restriction Types at Connected Vehicle Enviroment Intersections 56
Figure 30: Example of Intersection Information Data Entry 85
Figure 31: Example of Lane Properties Data Entry 86
Figure 32: Example of Lane Points Data Entry 87
Figure 33: Example of Connections Data Entry 88
Figure 34: Appendix A: ASCII Character Table 89
Figure 35: Approach Group Assignment for a Typical Four-Way Intersection 92
Figure 36: Lane ID Assignments for Each Approach Group 93
Figure 37: Kapsch RIS-9160 RSU Product Sheet 95
Figure 38: Danlaw RouteLink RSU Product Sheet 97
Figure 39: MOXA UC-8100 Product Sheet 99
Figure 40: MobileMark DSRC Antenna Product Sheet 103
Figure 41: QVT-14 GPS Antenna Product Sheet 104
Figure 42: PD-9001 GI/DC POE Product Sheet 106
Figure 43: Sensor Mount Product Sheet 108
Figure 44: eWalk Pedestrian Safety System Product Sheet 109
Figure 45: Heads-Up Display Specification 115
Figure 46: Rear-View Mirror Specification 115

Chapter 1. Introduction

1.1. PROJECT BACKGROUND

In 2016, the U.S. Department of Transportation (USDOT) awarded $40 million to the City of Columbus, Ohio, as the winner of the Smart City Challenge. With this funding, Columbus intends to address the most pressing community-centric transportation problems by integrating an ecosystem of advanced and innovative technologies, applications, and services to bridge the sociotechnical gap and meet the needs of residents of all ages and abilities. In conjunction with the Smart City Challenge, Columbus was also awarded a $10 million grant from Paul G. Allen Philanthropies to accelerate the transition to an electrified, low-emissions transportation system.

With the award, the City established a strategic Smart Columbus program with the following vision and mission:

- **Smart Columbus Vision:** Empower residents to live their best lives through responsive, innovative, and safe mobility solutions
- **Smart Columbus Mission:** Demonstrate how Intelligent Transportation Systems (ITS) and equitable access to transportation can have positive impacts on every day challenges faced by cities

To enable these new capabilities, the Smart Columbus program is organized into three focus areas addressing unique user needs: enabling technologies, emerging technologies, and enhanced human services. The Connected Vehicle (CV) Environment (CVE) primarily addresses needs in the enabling technologies focus area. The CVE project is one of the eight projects in the Smart Columbus program and is a significant enabler to other technologies delivered through the other seven projects. The CVE project will integrate smart traveler applications, connected vehicles, and automated vehicles into its transportation network by focusing on deploying CV infrastructure and CV applications.

- **CV Infrastructure:** The project will focus on building out the physical and logical CV infrastructure, which will consist of CV hardware and software (e.g. roadside units (RSUs), on-board equipment (OBE), front and backhaul communications, equipment interfaces, etc.). The CVE will generate the needed transportation-related data that are used by applications.
- **CV Applications and Data:** The project scope also consists of deploying CV-specific applications that will leverage the data generated by the infrastructure to deliver real-time safety and mobility services. Data will be collected, related, stored, and made available for use in other Smart Columbus project applications.

The CVE is expected to enhance safety and mobility for vehicle operators and improve pedestrian safety in school zones by deploying CV infrastructure on the roadside and CV equipment in vehicles. The CVE will also provide sources of high-quality data for traffic management and safety purposes.

The foundation for the CVE is the Columbus Traffic Signal System (CTSS), which is a high-speed network backbone. When complete, the CTSS will interconnect 1,250 traffic signals in the Columbus region and provide uniform signal coordination capability throughout the system. CTSS Phase D, which will connect all CVE corridors except for Alum Creek Drive, is expected to be complete by Q3 2019. An expansion of the CTSS to connect Alum Creek Drive will be included in the CVE project.

The CV infrastructure deployment will occur along four major corridors/areas. The deployment of in-vehicle devices will target populations that are located near or frequently used infrastructure deployment corridors. Table 1 lists the improvements associated with the CVE.

Table 1: Connected Vehicle Environment Project Scope

Infrastructure		Applications and Data	
100+ RSUs The project will install RSUs and necessary communications equipment at ~90 signalized intersections in the project areas.	**1,500 – 1,800 OBUs** The project will install onboard units (OBUs) on participating private, fleet, emergency, transit, and freight vehicles.	**CV Applications** The project will deploy vehicle-to-vehicle (V2V) safety, vehicle-to-infrastructure (V2I) safety, and V2I mobility applications.	**Data Capture** The project will capture, relate, store, and respond to data generated by the infrastructure, used by the applications for traffic management.

Source: City of Columbus

The intent of the CVE project is to improve safety and mobility of travelers by deploying CV technology as part of a larger initiative within the City to improve the overall transportation system. CV technology will also be deployed to support the City's automated vehicle project and to support the improvement in freight operations, another of the City's goals.

Collectively, CV is just one component, but if it proves to be effective, other projects can also benefit from the positive outcomes. Recall that the goal of the CVE is not to develop applications to a high level of maturity. It is to leverage what has already been developed. Thus, it is important for the reader to understand that the ability of the CVE to address the user needs captured in the ConOps depends on the availability of hardware and software solutions that have been previously deployed (and subsequently improved upon). To this end, throughout the CVE systems engineering process, several applications have been considered – each application was scrutinized in detail to ensure that only applications that were considered to be ready for deployment are included in the deployment of the CVE. Performance requirements detailed in the System Requirements document (see V2V Safety, V2I Safety, and V2I Mobility functional groups), outline expectations for each application that is deployed. The implementation of software is expected to demonstrate efficacy of the deployed infrastructure.

The applications and technology to be deployed as part of the CVE are the same (or very similar) to applications and technology employed in other connected vehicle projects. As similar applications are developed and employed as part of the CV Pilot projects, their maturity will continue to increase. It is expected that prospective vendors are perpetually making improvements to applications based on experience in testing and implementation. Thus, the design and implementation of the CVE will draw on improvements made to applications through these development efforts.

The Architecture Reference for Cooperative and Intelligent Transportation (ARC-IT)[1] and its predecessor, the Connected Vehicle Reference Implementation Architecture (CVRIA)[2], are resources that provide descriptions of CV applications that have been researched in the context of the National ITS architecture. Furthermore, the Open Source Application Development Portal (OSADP) contains software for applications that have been developed.[3] When possible, applications on ARC-IT, CVRIA and OSADP will be used as-is or will have minimal modifications made to address user needs documented in the ConOps.

Given that the primary scope of the CVE is to realize the benefits of deploying CV technology into an operational environment, only applications that have demonstrated sufficient levels of development and testing are being considered for implementation. It is expected that prospective vendors are perpetually

[1] https://local.iteris.com/arc-it/

[2] https://local.iteris.com/cvria/

[3] *Open Source Application Development Portal.* https://www.itsforge.net/

making improvements to applications based on experience in testing and implementation. However, the CVE will be designed in such a way that added functionality concepts (not implemented as part of this project, that require further development) can be integrated with the CVE once development and testing have matured to a point where applications are deployment-ready. Additionally, due to the networked nature of devices in the CVE, several policies and constraints related to information technology (IT) and data security are expected to be developed as part of the deployment. The backhaul network which supports roadside equipment in the CVE will require the establishment of a new network (on existing dark fiber). City of Columbus Department of Technology (responsible for managing Columbus' fiber network) has been engaged to establish necessary network security policies and design.

1.2. REFERENCES

To enable the realization of a successful Connected Vehicle Environment, the systems engineering process is being utilized. To this end, a Concept of Operations, System Requirements Specification, and Interface Control Document have been developed. The project team has held webinars corresponding to the release of the Concept of Operations and System Requirements Specification to formally present information to the public and external stakeholders and to receive feedback on information in each document. The list of related documents is summarized in the list below.

- Smart Columbus – *Concept of Operations for the Connected Vehicle Environment for the Smart Columbus Demonstration Program* (Aug. 7, 2018). Available at: https://smart.columbus.gov/uploadedFiles/Projects/Connected%20Vehicle%20ConOps%208.30.18.pdf
- Smart Columbus Connected Vehicle Environment Concept of Operations Webinar (July 25, 2018).
  - Presentation available at: https://smart.columbus.gov/uploadedFiles/Projects/180720_CV%20Environment%20ConOps%20Webinar_Final%20(2).pdf
  - Webinar recording available at: https://itsa.adobeconnect.com/_a932559885/p7axm0b2yle2?proto=true
- Smart Columbus – *System Requirements for Connected Vehicle Environment for the Smart Columbus Demonstration Program* (Nov. 30, 2018). Available at: https://smart.columbus.gov/uploadedFiles/Projects/SCC-B-SysReq-CVE-FINAL_wo%20lines.pdf
- Smart Columbus Connected Vehicle Environment System Requirements Webinar (Nov. 5, 2018)
  - Presentation available at: https://smart.columbus.gov/uploadedFiles/Projects/18_11_05_CVE_SyRS_Webinar_slides_PDF.PDF
  - Webinar recording available at: https://itsa.adobeconnect.com/_a932559885/psnntx55r2jt/?proto=true
- Request for Proposals for Connected Vehicle Environment In-Vehicle System Integration (RFQ011270) (Jan. 29, 2019)
- Request for Proposals for Connected Vehicle Environment Infrastructure System Integration (RFQ011273) (Jan. 29, 2019)
- Smart Columbus – *Interface Control Document for the Smart Columbus Demonstration Program* (April 8, 2019). Available at: https://smart.columbus.gov/uploadedFiles/Projects/SCC-B-CVE-ICD-FINAL.pdf

1.3. FUNCTIONAL SYSTEM OVERVIEW

The CVE can be described as a combination of subsystems that work together: a system of roadside equipment, a system of in-vehicle equipment, and a system of backhaul networks for agency data. On the roadside, the fundamental functions of the RSUs are to obtain several types of status information from roadside ITS devices and broadcast this information to vehicles in the vicinity.

Subsequently, in a vehicle, the fundamental functions of OBUs are to obtain various types of status information from the vehicle and broadcast this information to other vehicles and infrastructure in the vicinity. Similarly, the RSU exchanges information with the roadside ITS equipment, OBU-equipped vehicles, and location and time data to support mobility applications. Internal processes on OBUs and RSUs (that allow applications to function as intended) will be elaborated upon later in this document. Both the OBU and RSU utilize the Security and Credentials Management System (SCMS) to make sure that it is working with data from trusted sources, and the roadside device saves operational data on the Smart Columbus Operating System (Operating System).

Figure 1 shows Vehicle-to-Infrastructure (V2I) communication between vehicles and roadside devices (via DSRC); communication between roadside devices and data management systems (via backhaul); and Vehicle-to-Vehicle (V2V) communication between onboard devices (via DSRC). The system is being procured in two separate efforts – with a system integrator responsible for deploying the portion of the CVE in vehicles, and a system integrator responsible for deploying the portion of the CVE on the roadside. The blue and orange boundaries on the diagram indicate the portions of the system each integrator is responsible for. All objects that fall outside of this boundary are external systems. Regarding communications that occur over the boundary between these two systems (Interfaces 12, 13, 14, and 15 – DSRC between RSU and OBUs), vendors will be subject to testing throughout the pre-deployment collaboration process to assess interoperability and adherence to requirements and design.

<<<Additional details will be available and provided after the RSU System Integrator NTP and OBU System Integrator NTP which is anticipated in July 2019.>>>

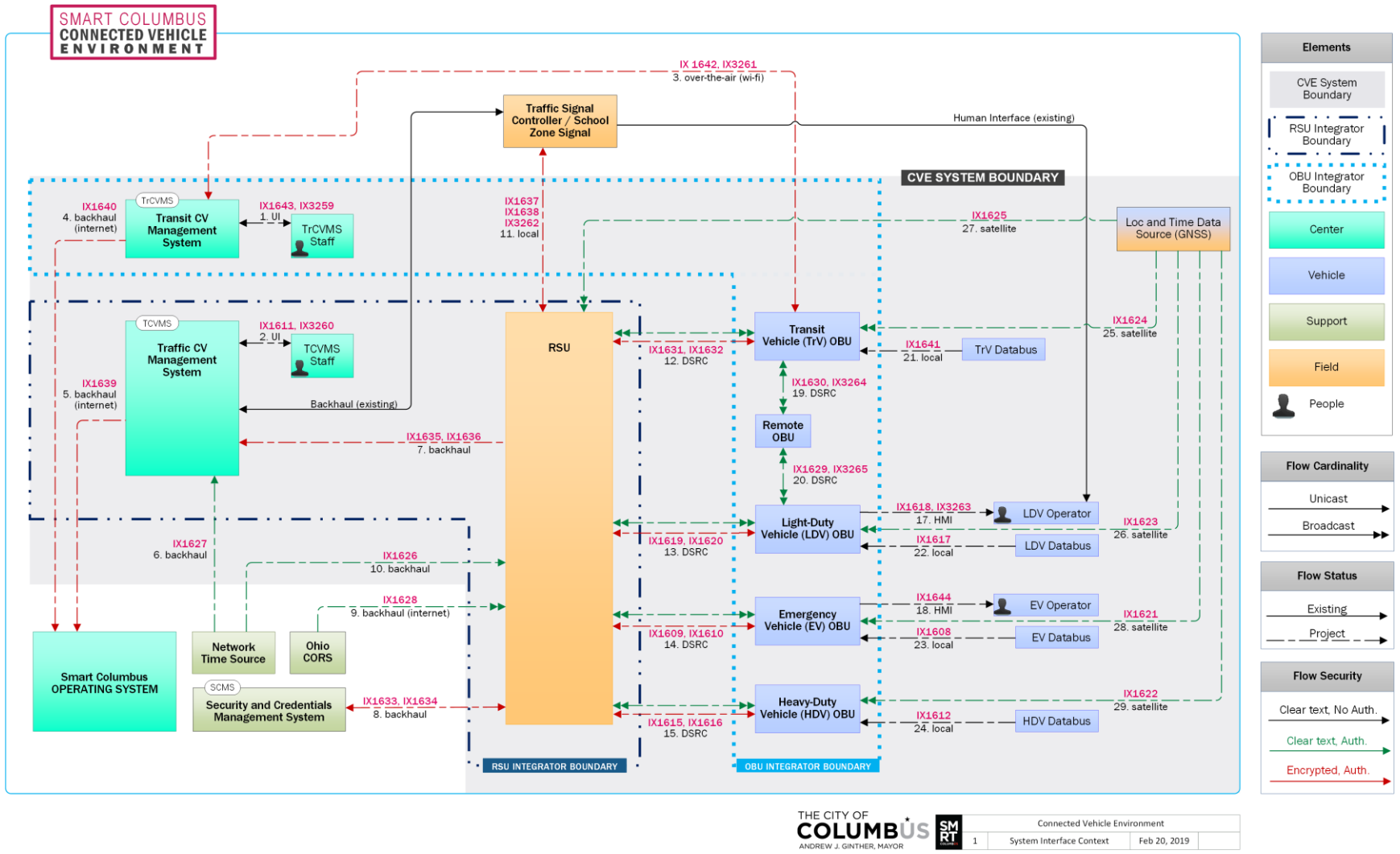

Figure 1. Physical View of the Smart Columbus Connected Vehicle Environment

Source: City of Columbus

Chapter 2. Design Stakeholders

From the beginning of the CVE project, various stakeholder groups have been engaged to develop first the Concept of Operations, followed by the System Requirements. In the case of the ConOps, the stakeholders typically represented end-users and system owner/operators. The inputs were user-oriented needs. Likewise, the System Requirements incorporated inputs from many stakeholders, several from the ConOps, but also additional persons, capturing requirements at a much more detailed and technical level. For the System Design Document, the mix and requirements of the stakeholders again changes. The SDD is the most technical oriented document produced under CVE, and the audience is that of a software developer, a system integrator, or an operator of the system. As shown below, the majority of the previous stakeholder groups do still have a role but notice also the addition of stakeholders related to design, implementation and deployment.

2.1. VEHICLE OPERATOR

The Vehicle Operator continues to be a stakeholder in the CVE SE process, but in this step of the process, serves more to validate design instead of dictating design. In other words, the vehicle operator is not expected to design the icon or warning graphics, or for that matter, the algorithm that determines if a warning is indicated, but instead, the vehicle operator is responsible for confirming that messages to them are clear and unambiguous. The CVE ConOps identified four (4) specific vehicle operator categories. For each, a brief summary of their role in the SDD and subsequent design / deployment is indicated.

- Light-Duty Vehicle (LDV) Operator – Will be key to evaluate if system messages are clear, concise, unambiguous and actionable. Further, will indicate if conflicting or repeated incorrect indictors are given.
- Transit Vehicle Operator – No specific role is indicated for the transit vehicle operator as the system does not provide any warnings or alerts to the driver.
- Emergency Vehicle Operator – Will provide anecdotal inputs on both the improvements of safety and efficiency of movements along the corridor, as well as to the reliability/value of the onboard pre-empt indicator.
- HDV Operator – For FSP equipped vehicles, will provide anecdotal inputs on the improvements of efficiency perceived when traversing enabled corridors.

2.2. DEPARTMENT OF PUBLIC SERVICE

The Department of Public Service will be responsible for overall management of the deployment, configuration, operations and maintenance of the CVE. The Division of Traffic Management within DPS will be responsible to identify and allow for signal pre-empt and priority requests, maintain signal controller operations, and report any misbehaving components.

2.3. CENTRAL OHIO TRANSIT AUTHORITY

The Central Ohio Transit Authority (COTA) will be have an active role in the design as the proposed OBU will integrate with the existing vehicle communications network, and further, the OBU data logs will be transferred to a COTA-maintained repository.

2.4. DEPARTMENT OF TECHNOLOGY

The Columbus Department of Technology (DoT) has a role to implement and maintain the portion of the CVE starting with the Communications Cabinets and extend to the TMC, the City-wide MetroNet and access of the CVE to the public internet. DoT staff will further assist with verifying that the equipment procured is able to meet City standard configurations, security, and maintainable along with installation support.

2.5. OBU SYSTEM INTEGRATOR

The OBU system integrator is responsible for the identification and procurement, development, configuration, installation, testing, maintenance, and in the case of private vehicles, possible removal, of the in-vehicle components that comprise the CVE. Removal of equipment from fleet vehicles, unless it is the case of malfunctioning equipment, or a vehicular accident, is not part of the scope. In all cases, the goal is for the equipment to remain after the demonstration period is complete. Also includes development of any software components necessary to fulfill the OBU functions identified by the CVE System Requirements, including, but not limited to, software development activities necessary to provide the safety and mobility applications as documented in the CVE Concept of Operations and System Requirements, connecting to and implementing the statewide security credential management system that DriveOhio is deploying and enabling over-the-air updates and data logging solutions, all of which are detailed in subsequent sections of this SDD.

2.6. RSU SYSTEM INTEGRATOR

The RSU system integrator that shall be responsible to identify and procure, provision, manage, operate and maintain the network of nearly 100 dedicated short-range communications (DSRC)-based roadside units (RSUs) that comprise the CVE. The scope of work for the Offeror will include development of any software components necessary to fulfill the RSU functions identified by the CVE System Requirements, including, but not limited to, integration with the Smart Columbus Operating System for real-time data exchange, software development activities necessary to provide the safety and mobility applications as documented in the CVE Concept of Operations and System Requirements, connecting to and implementing the statewide security credential management system (SCMS) that DriveOhio is deploying, enabling over-the-air updates for OBUs, and connection to additional outside resources such as a position correction service, network time source or similar. Further, the RSU system integrator will be responsible to support the necessary test activities, as developed by a separate third-party to Smart Columbus, and to demonstrate that the infrastructure components meet all mandatory requirements.

2.7. RSU INSTALLATION CONTRACTOR

An Electrical Contractor will be responsible for completing the construction and preliminary configuration of the CVE network. This same Electrical Contractor will also be responsible to install all roadside infrastructure components (DSRC RSUs, power-over-Ethernet modules, GPS antennas, etc.) as provided by the RSU system integrator.

Chapter 3. Design Concerns

<<<Material in this section expected to be heavily influenced by discussions with vendors. Text to be added once the Notice to Proceeds (NTP) have been issued in July 2019 to have dialogues with the RSU System Integrator and OBU System Integrator regarding concerns. Recall that requirements were developed with off-the-shelf deployment for vehicle-based applications in mind. This section will reiterate selected vendor's responses to requirements matrix – specifically challenges in meeting certain requirements (without major modification). These responses will influence the design specified in this document. Concerns are not expected to have a significant impact on the scope of the CVE, and

- *Organize design concerns by each design stakeholder: list/describe all of their design concerns. Consider table?*
- *Guidance: design concerns arise from specific requirements (SyRS) on the software, although others arise from contextual constraints. Consider SyRS reference for traceability.*
- *Areas of interest with respect to a (software) design. A design concern names any area of interest in the design, pertaining to its development, implementation, or operation. Typical design concerns include functionality, reliability, performance, and maintainability.>>>*

3.1. POSITIONAL ACCURACY

One of the most important underlying aspects of the proper function of all V2V applications is the accuracy of location data – both the location of the host vehicle (as provided by GNSS in the host vehicle) and the location of remote vehicles (as indicated in BSMs received by the host vehicle). Location data received from GNSS contains several data items that indicate positional accuracy (e.g. horizontal dilution of precision, position dilution of precision, geometric dilution of precision). Likewise, the BSM contains data elements related to positional accuracy (e.g. *SemiMajorAxisAccuracy* and *SemiMinorAxisAccuracy* under the *PositionalAccuracy* data frame). It is important to consider that when performing operations with multiple points of data (e.g. calculating the distance or difference of speeds between two objects), the variances in those data are generally considered to be additive. Positional accuracy will have an impact on the determination of both the longitudinal distance and the lateral separation between two vehicles, and it is important to consider how each will impact the timing and location at which a warning may be issued to a driver.

It is known that in certain instances that position data may not be accurate enough to deliver a warning to the vehicle operator with a reasonable degree of accuracy. One policy that has been established for the CVE is to minimize the number of false positive outputs from the LDV OBUs to LDV Operators – this likely comes at the expense of potentially not alerting the LDV operator of a potential crash situation. However, LDV Operators will come to expect that the system will not provide a warning in all crash-imminent situations. Given that there will only be a small percentage of vehicles equipped with OBUs, there will be many instances where the LDV Operator will encounter non-equipped vehicles. Obviously, the LDV OBU will not be able to warn the LDV Operator about crash imminent situations with these vehicles, and the LDV Operator is expected to become accustomed to this rather quickly – this will be instituted in training that all LDV Operators will receive. Rather, when a warning is issued to an LDV Operator, the driver should understand that the OBU is providing a reliable indication that a crash is imminent and be accustomed to taking immediate action to avoid the potential crash.

Requirements for V2V applications indicate that the issuance of warnings should not have a false discovery rate (number of false positive alerts divided by total number of alerts) greater than 2%. Measures of positional accuracy (examples given above) will need to be used to determine the maximum allowable longitudinal and lateral variances that allow each application to adhere to this requirement.

Likewise, proper operation of V2I applications may be limited due to positioning limitations. Since V2I applications rely more on longitudinal positioning (less sensitive to inaccuracies than lateral positioning) and only involve a single vehicle (i.e. impacts on variance is not compounding, as when the positioning of two vehicles are involved), these applications are expected to be more reliable and consistent than V2V safety applications. Nevertheless, the issuance of warnings from these applications are also subject to not exhibiting a false discovery rate greater than 2%.

Chapter 4. System Decomposition

4.1. ROADSIDE UNIT

4.1.1. Physical/Mechanical

4.1.1.1. MOUNTING

The Roadside Unit is designed to be mounted on either a vertical or horizontal pole, mast arm or bracket arm, including those comprised of either round or square pipe, or tethered between a messenger wire and tether wire. Attachment is preferred stainless steel cable straps, however properly sized U-Bolts may also be used. The specific pipe size to which the unit must attach is dependent on the specific mounting location, but it is expected that the device can support tube or pipe size ranging between 1½ inches and up to 8 inches.

4.1.1.2. POWER

The RSU shall support an IEEE 802.3at-2009 Power-over-Ethernet (PoE) interface, not to exceed 25 Watts. The vendor shall supply the necessary PoE injector to be installed in the controller cabinet where access to 115/15A power will be available. The PoE injector does not need to be weatherproof but must be capable of operations in an extended temperature and humidity range – 40 to 140 degrees Farenheit, and 10 to 90% relative humidity.

4.1.1.3. CONNECTIONS

The RSU shall support at a minimum, the following electrical connections:

- 1 RJ-45 Weatherproof Ethernet (PoE-capable)
- 2 N-Type Female DSRC Connectors
- GNSS (varies) – Typically SMA

4.1.1.4. ANTENNA

The RSU will, at a minimum, includes two DSRC radios and corresponding antenna and a single GNSS antenna.

- DSRC: 2 Omni-directional 6dBi, 5.9 GHz antenna with N-Type female connector
- GNSS: 1575 MHz, 50 Ohm, 14 dB Active GPS Antenna

4.1.2. Firmware

4.1.2.1. DEVICE CONFIGURATION

The RSU System Integrator Team will configure each Roadside Unit prior to being deployed. This minimizes the Electrical Contractor's effort at the time of installation.

The following items will be configured on each RSU:

- IPv4 Network Address
- IPv6 Network Address
- IPv6 DSRC Radio Address
- Smart Columbus Operating System SNMP Server IPv4 Address
- Messages
  - SPaT
  - MAP
  - RSM
  - SRM
  - SSM
- WSAs
  - PSIDs
  - WRA

<<<list specific configurations items/options for Kapsch, Danlaw, and Siemens RSUs. Additional details will be available and provided after the RSU System Integrator NTP which is anticipated in July 2019.>>>

4.1.2.1.1 SCMS Enrollment

Each RSU manufacturer will define a secure process for configuring and equipping the units with the necessary security credentials. Each unit will go through a secure enrollment process with the SCMS.

<<<list specific configuration processes/procedures for Kapsch, Danlaw, and Siemens RSUs. Additional details will be available and provided after the RSU System Integrator NTP which is anticipated in July 2019.>>>

The RSU System Integrator will configure each RSU using the appropriate setup processes including generating the enrollment keys, submitting the enrollment keys to the SCMS, retrieving the initial certificates, and loading the initial certifications on the unit. Once deployed, the RSU security modules will automatically connect to the SCMS to request application certificates.

RSUs can update security certificates automatically, without operator intervention.

Once a device is configured, a backup of all configuration parameters/files is saved on a Path Master server for reference and/or in the event a hardware failure the replacement device can be configured the same as the original.

The RSU System Integrator will deliver configured RSUs to the City for installation.

4.1.2.2. CERTIFICATE TOP-OFF

RSUs will maintain two weeks' worth of certificates for each application; this week and next week. On the last day of the current week, RSUs will request certificates for the following week; always maintaining two weeks' worth of certificates on board.

RSUs can update security certificates automatically, without operator intervention.

4.1.2.3. REMOTE UPDATES

The RSU firmware can be updated from the operation center by center personnel. Updates are applied after the firmware has gone through testing in the operation center. This will minimize deploying firmware updates that do not resolve an identified issue or cause unintended issues. The RSU firmware update process and procedures are defined in the Smart Columbus CVE Operation and Maintenance Document (to be developed later)

4.1.2.4. MISBEHAVIOR DETECTION

If available, RSUs will download Certificate Revocation Lists (CRL) every Monday. CRLs are utilized to reject messages from bad actors and prevent compromised devices from broadcasting bad data. If the RSU detects it is on the CRL, the RSU will not broadcast WSAs, SPaT, MAP, or other messages. This ensures the RSU does not continue to broadcast invalid messages.

4.1.2.5. LOCATION SERVICES AND TIME SYNCHRONIZATION

All RSUs have a GNSS receiver to obtain position and time. RSU position is required for security, to ensure the device has not been moved from its installation location. GNSS time is utilized to set and maintain device “System Time”. System Time is required for security, channel switching synchronization, and application synchronization

4.1.2.6. EVENT LOGGING

RSUs can be configured to log system events, errors, or other anomalies. This helps Operations and Maintenance troubleshoot the device/system when irregularities occur.

<list specific configurations items/options for Kapsch, Danlaw, and Siemens RSUs. Additional details will be available and provided after the RSU System Integrator NTP which is anticipated in July 2019>

4.1.2.7. BUILT-IN SELF-TEST

Upon boot up, RSUs perform a self-check to ensure all subsystems within the device are operational. If one or more subsystems are not operational, the RSU will set an error in the appropriate SNMP Object Identifier (OID) to inform the operations staff.

4.1.2.8. MESSAGE FORWARDING

RSUs will forward messages to remote hosts for processing, further distribution, and archival. Message forwarding is in accordance with USDOT DSRC RSU Specification 4.1a. The following parameters are configured on each RSU for each message:

- BSM
  - Smart Columbus Operating System IP Address (for archive and distribution)
  - PSID 0x20
  - *<<<specific configurations items/options for Kapsch, Danlaw, and Siemens RSUs. Additional details will be available and provided after the RSU System Integrator NTP which is anticipated in July 2019.>>>*
- SPaT
  - Smart Columbus Operating System IP Address (for archive and distribution)
  - PSID 0x82

- SRM
  - Smart Columbus Operating System IP Address (for archive and distribution)
  - PSID 0x20-40-96
  - *<<<specific configurations items/options for Kapsch, Danlaw, and Siemens RSUs. Additional details will be available and provided after the RSU System Integrator NTP which is anticipated in July 2019.>>>*
- SRM
  - Message Handler IP Address (for processing and placing a priority call to the Signal Controller)
  - PSID 0x20-40-96
  - *<<<specific configurations items/options for Kapsch, Danlaw, and Siemens RSUs. Additional details will be available and provided after the RSU System Integrator NTP which is anticipated in July 2019>>>*

4.1.3. System Monitoring

RSUs will be monitored by the Kapsch SC3/CV TMC, which provides a robust system for managing the City's connected assets. SC3's architecture is flexible, allowing a variety of external connections and configurations, meeting the Smart Columbus TMC requirements. SC3 functionality includes:

- **Asset Management:** Each location and its associated equipment can be defined, and information maintained. Most configurations are set at the location level, rather than the device level. This allows equipment to be swapped out quickly and easily with minimal setup required.
- **MAP Generation:** SC3 includes the ability to build MAP messages via an intuitive graphical user interface directly on a MAP view of the intersection or road segment.
- **TIM Message Generation:** SC3 includes functionality for building and distributing TIM
- **Message Definition and Scheduling:** RSU messages can be created and configured via robust scheduling. This includes the ability to set specific times, days of the week, and intervals in which messages will be transmitted. Messages and message scheduling can be easily updated and sent to the RSUs.
- **Data Management:** Real-time traffic information can be monitored at each location. This includes traffic signal phasing and all communication between RSUs, OBUs, and pedestrians.
- **Automated Monitoring and Alert:** Dashboards and statuses provide the ability to monitor all devices within the network to detect any issues in connectivity or messaging. Designated TMC personnel will register for alerts and notifications when issues arise with equipment, system functions, or recorded data.

<<<List specific configurations items/options for Kapsch, Danlaw, and Siemens RSUs. Additional details will be available and provided after the RSU System Integrator NTP which is anticipated in July 2019>>>

4.1.4. Message Handler

Each intersection will have a Message Handler to encode/decode J2735 messages for use with remote hosts (Signal Controller, Smart Columbus Operating System, etc.).

4.1.4.1. POSITION CORRECTION

The Message Handler will receive Networked Transport of Radio Technical Commission for Maritime (RTCM) via Internet Protocol (NTRIP) RTCM messages, wrap the RCTM messages with a SAE V2X Message Header, and send the SAE J2735-032016 RTCM messages to the RSU for broadcast as Immediate Forward Messages. Note that the OBUs deployed by the OBU Integrator will also receive position corrections data via satellite to support its operations.

4.1.4.2. SIGNAL REQUEST MESSAGES

The Message Handler decodes Signal Request Messages (SRM) received from RSUs and sends a priority call to the Signal Controller. If the Message handler receives multiple priority requests simultaneously, the Message handler will determine the order of all request based on the following criteria:

- Transit
  - Schedule
  - Number of passengers
  - Time to intersection
- First Responders
  - Time to intersection

4.1.4.3. SIGNAL STATUS MESSAGES

The Message Handler encodes Signal Status Messages (SSM) based on data received from the Signal Controller. Data includes Request ID currently being served, intersection ID, and request ID's currently in queue.

4.1.5. Service Channel Plan

Each RSU is assigned a Service Channel based on an overall system wide Service Channel Plan. A Service Channel plan minimizes channel overlap at neighboring RSUs, which maximizes the number of vehicles that can communicate with back office services simultaneously.

4.2. ONBOARD UNIT

4.2.1. Physical/Mechanical

4.2.1.1. MOUNTING

The OBU measures 8.15" x 5.4" x 1.26" and weighs <<<*TBD*>>>. The OBU case includes four (4) mounting tabs with <<<*TBD*>>> thru-holes. See Figure 2. Mounting locations for the OBU may vary depending on vehicle type but is primarily expected to be mounted as an under-dash unit, using nylon wire-ties. Other potential mounting locations include the trunk, under a seat, glove box, or in the case of equipped transit vehicles, the accessory rack. The location shall be inconspicuous to driver, passengers and persons outside of the vehicle. Further, the OBU shall be mounted in a manner that will allow for the vehicle to be returned to its original, pre-installation condition. Use of wire ties, hook and loop tape (Velcro), removable clips or other non-permanent means shall be permitted. Use of existing holes to facilitate mounting is permissible so long as the use of said holes does not prevent their original purpose from being satisfied. Attaching to existing wire bundles is not ideal but is permissible if the bundle itself is secured by a wire-tire or clip and the

strain/weight of the wire is not directly imposed on the electrical connector. If mounted under dash or under the seat, the unit shall be installed on the passenger side such that a dislodged unit will not interfere with the operator's ability to operate the vehicle.

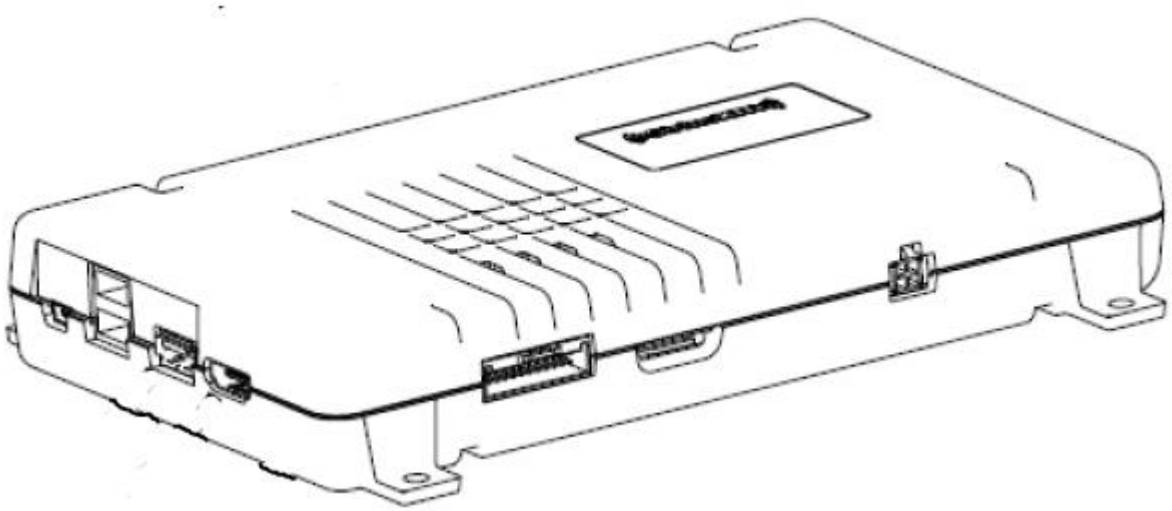

Figure 2. Onboard Unit

Source: Siemens/Brandmotion/SiriusXM

4.2.1.2. POWER

The OBU must be connected directly to the vehicle battery using the supplied four-wire wiring harness. Further, the OBU shall also be connected to a switched accessory port (ACC) using this same wire harness. Pinout of the OBU power connector is shown in **Table 2**.

Table 2. Onboard Unit Power Pinout

Pin	Signal Name	Description	Signal Characteristics
1	VCC_In	Vehicle Battery	8-16V Always On
2	GND	Ground	
3	ACC	Vehicle Accessory	8V – 16V when vehicle is on. Floating/High-Z when vehicle is off
4	GND	Ground	

Source: SiriusXM

4.2.1.3. CONNECTIONS

The following connections are required to interface the OBU with the corresponding Human-Machine Interface, Antenna and other Vehicle Systems. The front view shown in **Figure 3** includes the following:

- **Power Cable Connector** – connected directly to vehicle battery, with a second connection to the Accessory power used to detect the ignition state of the vehicle.

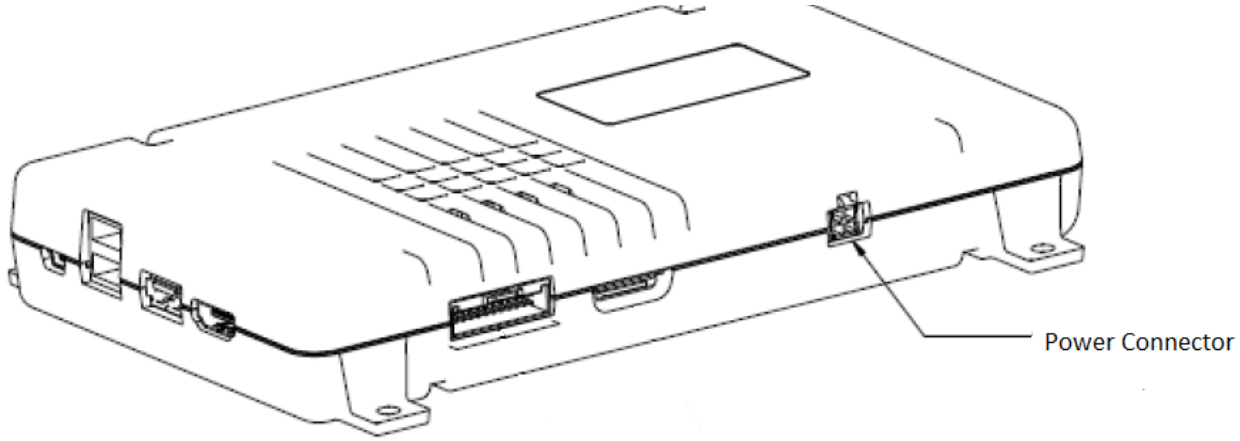

Figure 3. Front View of Electrical Connectors

Source: Siemens/Brandmotion/SiriusXM

Additional Connections shown on the side and rear (see **Figure 4**) of the unit include:

- **HDMI**– video signal for touchscreen monitor
- **Touchscreen Interface** – Control and power for touchscreen monitor
- **Dual USB**– Power and control of external devices
- **USB Mini-B**– for system debug and configuration
- **Antenna Connector** – Automotive Ethernet communication with Antenna.

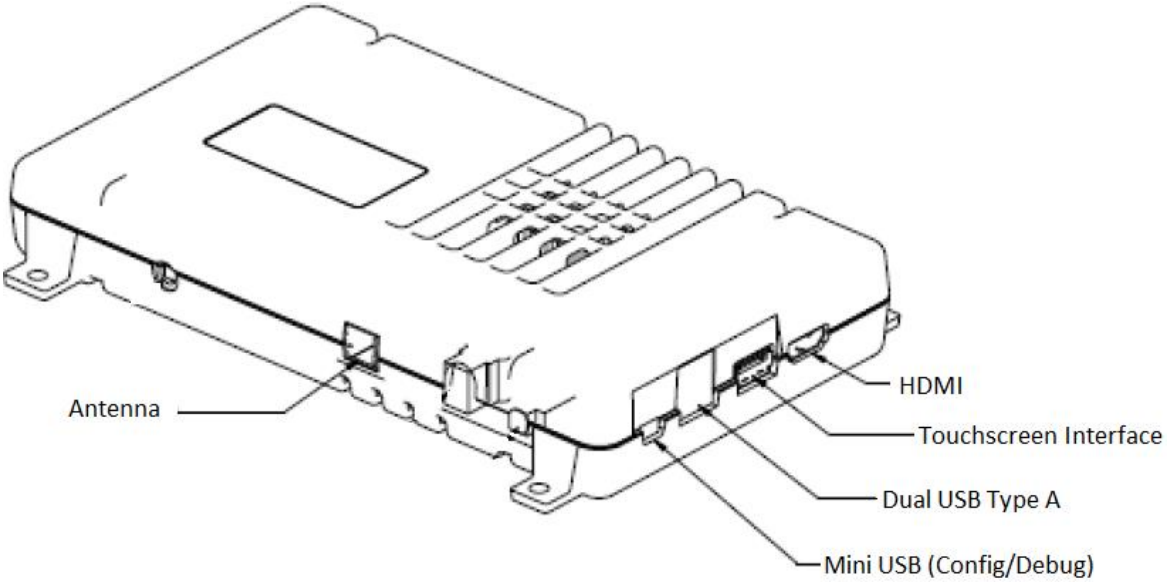

Figure 4. Rear View of Electrical Connectors

Source: Siemens/Brandmotion/SiriusXM

4.2.1.4. HUMAN MACHINE INTERFACE

Three options for a Human Machine Interface (HMI) are expected to be available for installation. These include a 7-inch Touchscreen Monitor, a 3-by-5-inch Heads-Up Display (HUD) and a simple back-lit indicator for use in Emergency Vehicles. The two full-featured displays offer a high-resolution, full-color capability with variable brightness setting and visible in all expected lighting conditions.

4.2.1.4.1 Touchscreen Display

The touchscreen display interfaces with the OBU using two separate connections, a standard HDMI cable to provide video and sound, and a Type A USB cable that provides power and control to the unit. Figures TS1 and TS2 show the controls and connection available on the display.

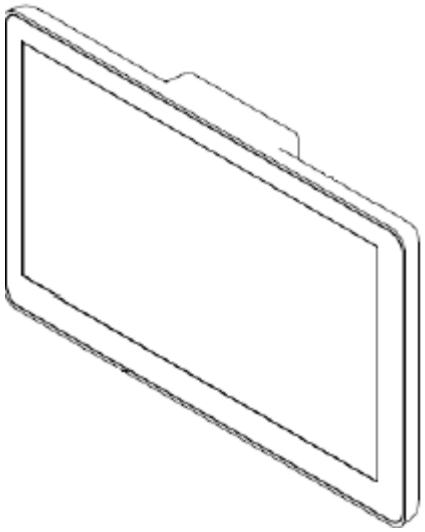

Figure 5: Touchscreen Display Controls

Source: Siemens/Brandmotion/SiriusXM

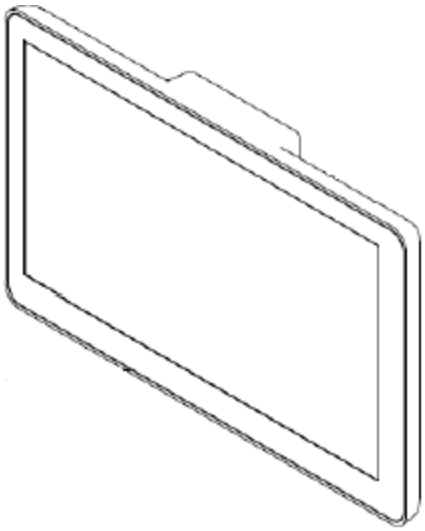

Figure 6: Touchscreen Display Interface Connections

Source: Siemens/Brandmotion/SiriusXM

The touchscreen will be mounted in vehicles using a suction-cup base mount similar to the one in Figure 7, which allows the display to be positioned in the optimal location to the driver.

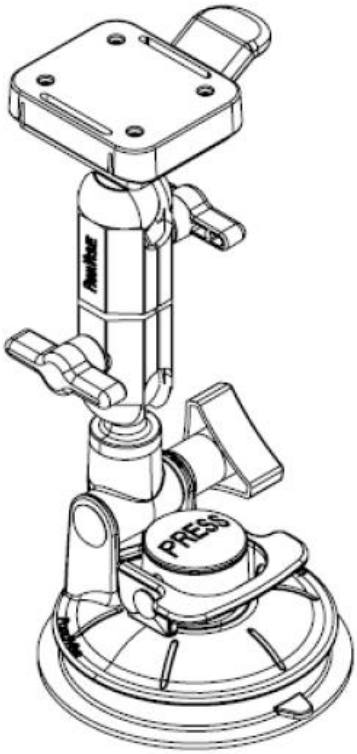

Figure 7. Touchscreen Mounting Assembly

Source: Siemens/Brandmotion/SiriusXM

4.2.1.4.2 Heads-Up Display

The Heads-Up display will be mounted to the dashboard using hook-and-loop tape, or other double-sided tape, in a manner that will be visible to the driver but not obstruct their view of the road or any critical displays in the vehicle. <<<*The HUD is expected to interface to the OBU via the 3.5mm audio jack and the RCA composite video input.*>>> Further, the HUD will require a separate power connection to a switch source such as that provided by the vehicle accessory port (ACC). Power draw from the HUD is not expected to exceed 2A continuous and is rated for <50mA in the key off position.

4.2.1.4.3 Preempt Indicator Display

The Emergency Vehicle Pre-empt indicator will be mounted on either the dashboard or vehicle console using hook-and-loop tape, or other double-sided tape. The preempt indicator will interface to the OBU via <<<*TBD*>>> No separate power source is necessary for this HMI.

4.2.1.5. ANTENNA(AE)

The Digital Antenna includes a Satellite (SDARS) receiver module, a GNSS receiver module and a dual-channel DSRC transceiver module all in a single, weather-proof externally mounted magnetic unit. The dimensions of the Digital Antenna are: 120mm x 90mm x 36mm. The weight is 440 grams. A single thin (Ø2.3mm) Unshielded Twisted Pair (UTP) Automotive Ethernet cable extends from the antenna a length of 22 feet for light vehicles and 44 feet for use in trucks, buses and fire apparatus. The use of a digital antenna allows for most of the processing to occur directly in the antenna, reducing the cable size necessary to interface the antenna with the OBU to a minimal size.

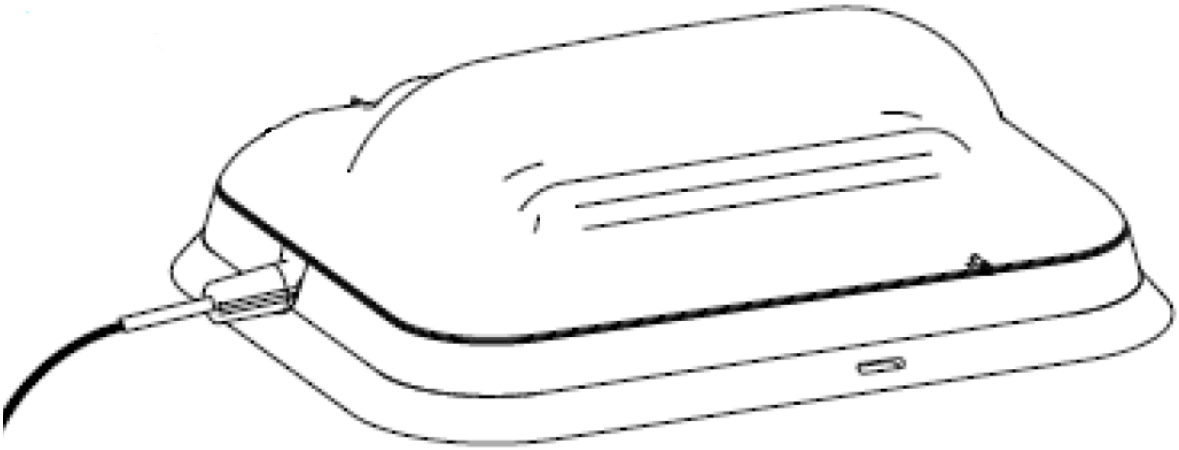

Figure 8. Digital Antenna

Source: Siemens/Brandmotion/SiriusXM

4.2.1.6. WIRING

The following figures show examples of antenna cable routing that may be used in various vehicle types. As with the OBU mounting, all wiring shall be reversible.

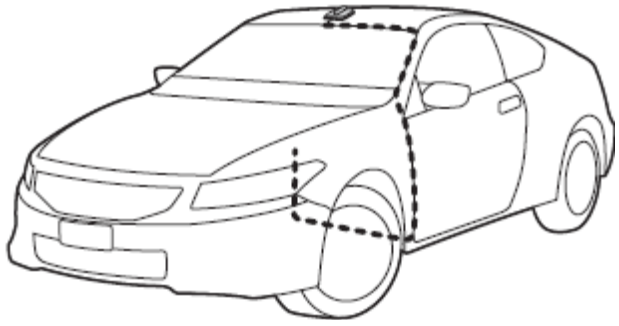

Figure 9. Wire Routing Example – Light-Duty Vehicle

Source: Siemens/Brandmotion/SiriusXM

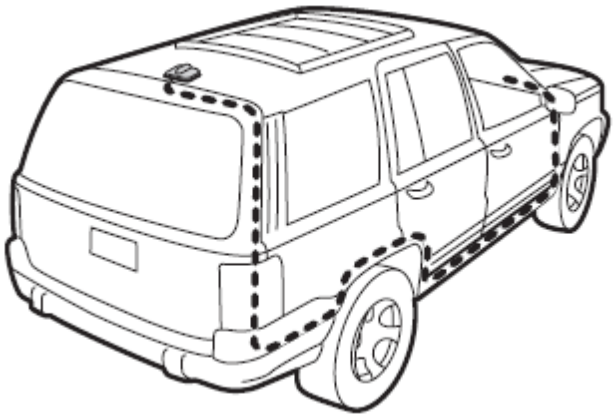

Figure 10. Wire Routing Example – Sport Utility Vehicle

Source: Siemens/Brandmotion/SiriusXM

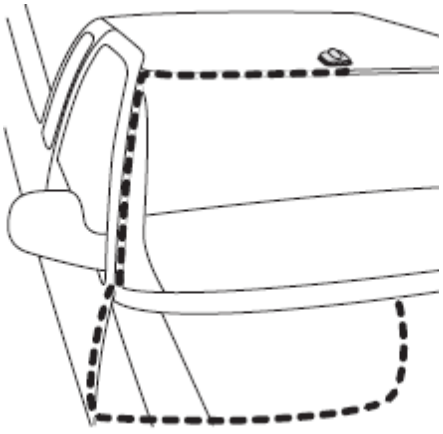

Figure 11. Wire Routing Example – Light-Duty Pickup Truck

Source: Siemens/Brandmotion/SiriusXM

4.2.1.7. SIERRA MODEM INTERFACE – TRANSIT ONLY

OBUs installed in revenue service transit vehicles shall be interface with the existing Sierra wireless modem via a fixed Ethernet connection. *<<<Need COTA / SiriusXM Input to elaborate on this section. Additional details will be available and provided after the OBU System Integrator NTP which is anticipated in July 2019.>>>*

4.2.2. Firmware

4.2.2.1. DEVICE CONFIGURATION

In the OBU System Integrator team, Siemens will configure each SiriusXM On-Board Unit (OBU) prior to providing it to BrandMotion for vehicle installation. This minimizes the installation shops effort at the time of installation.

The following items will be configured on each OBU:

- IPv4 Network Address
- Antenna Offsets
- Enrollment in SCMS

<<<List specific configuration items/options for the SiriusXM OBU. Additional details will be available and provided after the OBU System Integrator NTP which is anticipated in July 2019.>>>

4.2.2.1.1 SCMS Enrollment

SiriusXM On-Board Unit (OBU) require a secure process to configure and equip the device with the necessary security credentials to successfully operate in the Smart Columbus system. Each unit will go through a secure enrollment process with the SCMS.

<<<List specific configuration processes/procedures for the SiriusXM OBU. Additional details will be available and provided after the OBU System Integrator NTP which is anticipated in July 2019.>>>

Siemens will configure each OBU using the appropriate setup processes including generating the enrollment keys, submitting the enrollment keys to the SCMS, retrieving the initial certificates, and loading the initial certifications on the unit. Once the OBU is enrolled in the SCMS, the OBU security modules will automatically connect to the SCMS to request 3 yrs worth of pseudonym certificates.

OBUs update security certificates automatically, without operator intervention.

Once a device is configured, a backup of all configuration parameters/files is saved on a Siemens server for reference and/or in the event a hardware failure the replacement device can be configured the same as the original.

The OBU Integrator will deliver configured OBUs for installation.

4.2.2.2. CERTIFICATE TOP-OFF

To the extent possible, each OBU will maintain three years' worth of pseudonym certificates. When in communication range of an RSU on, or after, the last day of the current week, an OBU will request certificates for the following week(s) to always maintain three years' worth of certificates on board.

OBUs update security certificates automatically, without operator intervention.

4.2.2.3. THREAT DETECTION

<<<Describe the SiriusXM OBU Threat Detection algorithm at a high level [nonproprietary]. Additional details will be available and provided after the OBU System Integrator NTP which is anticipated in July 2019.>>>

4.2.2.4. THREAT ARBITRATOR (OBU MANUFACTURE DEPENDENT, MANUFACTURE MAY NOT BE WILLING TO SHARE DETAILS.)

<<<Describe the SiriusXM OBU Threat Detection arbitration process/priorities at a high level [nonproprietary]. Additional details will be available and provided after the OBU System Integrator NTP which is anticipated in July 2019.>>>

4.2.2.5. OVER-THE-AIR (OTA) UPDATES

OBUs will utilize an RSU's IPv6 service to connect to a designated server to determine its firmware updates or patches are available for download. If firmware updates are available, the OBU will download and store the required files.

<<<List specific OTA processes/procedures for the SiriusXM OBU. Additional details will be available and provided after the OBU System Integrator NTP which is anticipated in July 2019.>>>

4.2.2.6. MISBEHAVIOR DETECTION

If available, OBUs will download Certificate Revocation Lists (CRL) every Monday. CRLs are utilized by OBUs to reject messages from bad actors and prevent compromised devices from broadcasting bad data. If the OBU detects it is on the CRL, the OBU will not broadcast BSM or other messages to ensure the OBU does not continue to broadcast invalid messages. The device will generate a system log noting the date and time the device determined it was on the CRL.

4.2.2.7. LOCATION SERVICES AND TIME SYNCHRONIZATION

All OBUs have a GNSS receiver to obtain position and time. OBU position is required for proper application performance and security. GNSS time is utilized to set and maintain device "System Time". System Time is required for security, channel switching synchronization, and application synchronization.

4.2.2.8. POSITION CORRECTION

OBUs will utilize corrections data available via satellite. SAE J2735-032016 RTCM messages will still be broadcast from RSUs. Note that the OBUs deployed by the OBU Integrator will also receive position corrections data via satellite to support its operations.

<<<List specific Position Correction processes/procedures, features, and/or options for the SiriusXM OBU. Additional details will be available and provided after the OBU System Integrator NTP which is anticipated in July 2019.>>>

4.2.2.9. EVENT LOGGING

Transit OBUs log the following event types

- OS/General System Events
- Tamper Detection Events
- Driver Alert Event

Transit Vehicle OBUs also log transmitted and received BSMs.

Transit Vehicle OBUs have 4 GB of Storage to maintain 2 days' worth of log files.

4.2.2.10. LOG OFFLOADING

When a Transit Vehicle returns to the Maintenance garage after a shift, the OBU offloads its logfiles using the IPv6 service of the local RSU. Log Files are utilized by the COTA Fleet Manager to monitor the operation of the device.

Once logfiles are offloaded to COTA, they are deleted from the OBU.

<<<List specific log file configuration parameters for the SiriusXM OBU. Additional details will be available and provided after the OBU System Integrator NTP which is anticipated in July 2019.>>>

4.2.2.11. BUILT-IN SELF-TEST

Upon bootup, OBUs perform a self-check to ensure all subsystems within the device are operational. If one or more subsystems are not operational, the OBU will write entry in its system log file.

4.2.2.12. TAMPER DETECTION

The SiriusXM OBU provides a tamper detection label as a visual indication the device has been opened as well as a system logfile entry when a compromise is detected. The OBU will erase all keys and pseudonym certificates if a compromise of the Hardware Security Module (HM) is detected.

<<<List specific Tamper Detection methods and Mitigation Action for the SiriusXM OBU. Additional details will be available and provided after the OBU System Integrator NTP which is anticipated in July 2019.>>>

4.2.2.13. HMI OUTPUT

Light Duty and Emergency vehicle OBUs contain a Human Machine Interface (HMI) to alert drivers to potential threats from other connected vehicles in their vicinity.

Light Duty vehicle OBUs will provide driver alerts for the following applications:

- Emergency Electronic Brake Light Warning
- Forward Collision Warning
- Intersection Movement Assist
- Lane Change Warning / Blind Spot Warning
- Red Light Violation Warning
- Reduced Speed School Zone

First Responder vehicle OBUs will provide driver alerts for the following applications:

- Emergency Vehicle Preemption

4.3. TRAFFIC SIGNAL CONTROLLER / SIGNAL CABINET

A total of 85 signalized intersections will be equipped with the necessary Roadside Units and support equipment to enable the CVE. The majority of these intersections are owned and operated by the City of Columbus. However, Franklin County owns and operates a group of intersections, along both Cleveland Avenue and Alum Creek Drive while Ohio DOT District 6 is the owner/operator of three intersections on Alum Creek Drive. All intersections are presently or will be connected to the Columbus Traffic Signal System (CTSS) at the time of go-live for the CVE. Further, it is expected that all intersections will be similarly equipped, details of which follow.

4.3.1. Physical/Mechanical

4.3.1.1. SIGNAL CONTROLLER

The Traffic Signal Controller will be an Econolite Cobalt-C series controller, running the Econolite Operating System (EOS) at all DPS-maintained intersections. The traffic signal controller at some non-DPS-maintained intersections may be Siemens. The Cobalt-C allows the newest generation of advanced transportation controllers (ATC) to be provided in a form factor that will function in a NEMA TS-1 or NEMA TS-2 Type 2 cabinet, as that is the standard used by the City. To support the current version of the SPAT message, all controllers will be running EOS, version TBD. The front panel of the Cobalt-C is shown in Figure 12.

Source: Econolite

Figure 12: Front Panel of Econolite Cobalt-C Controller

4.3.1.2. CONNECTED VEHICLE CO-PROCESSOR (CVCP)

In addition to the Cobalt-C, each intersection will be equipped with an Econolite Connected Vehicle Co-processor (CVCP) card installed in the controller expansion slot. The CVCP is comprised of an iMX6 Quad Core Processor with support for Linux 3.x. The CVCP is the preferred location for any local processing that may be necessary at the intersection. Figure 13 shows the CVCP card installed in the Cobalt-C controller. Figure 14 describes the interface to the controller. The CVCP, when equipped with an external 48VDC supply may be used as the PoE+ for the RSU.

Source: Econolite

Figure 13: Econolite Cobalt Controller with CVCP Card Installed

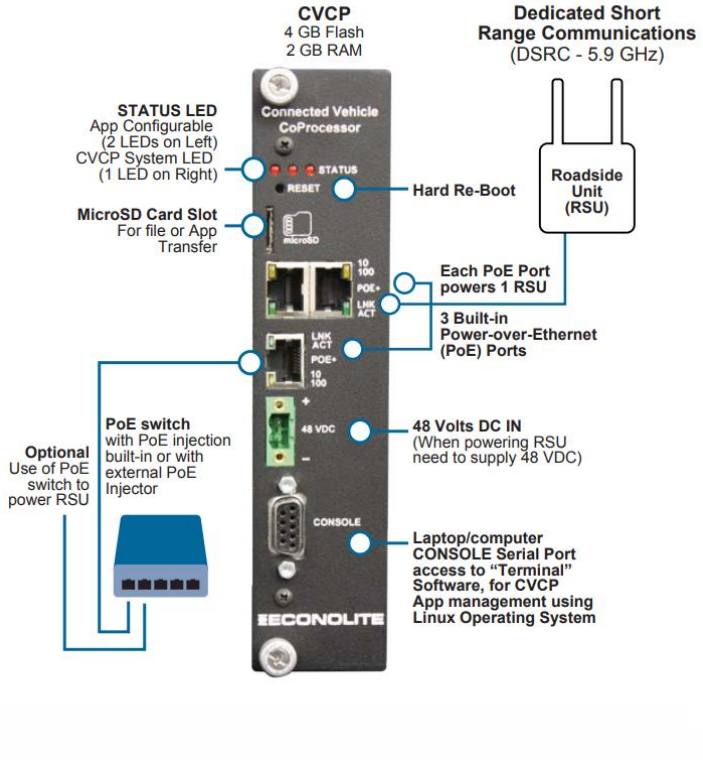

Source: Econolite

Figure 14: Econolite CVCP Front Connectors

4.3.1.3. DOOR OPEN SWITCH

All signal cabinets that are part of the CVE will be equipped with a door switch that will notify staff at the City TMC when a door is opened. The switch will not affect signal timing operations, inhibit work necessary to be performed by maintenance personnel, or affect the CVE. This feature will enable operations staff to corroborate any detected activities with maintenance staff ensuring that no unauthorized access to the CVE occurs. Every controller cabinet and node cabinet in the project will be equipped with City of Columbus padlocks, which will provide the first layer of physical security.

4.3.2. Signal Operations

4.3.2.1. TIMING PLANS

The City of Columbus maintains a library of signal timing plans associated with each intersection. Timing plans, including time-of-day restrictions shall be made available to the RSU and OBU vendors, as appropriate, as part of the design activity. Public disclosure of these plans is not common practice. These are critical for device configuration particularly for creating signal groups and phase-to-lane movement mapping.

4.3.2.2. PREEMPT RULES

Presently, Emergency Vehicle Preempt will be available at all CV-equipped intersections to equipped fire and police responders. Signal preemption allows emergency vehicles to disrupt the normal signal cycle in order to proceed through the intersection more quickly and under safer conditions. The preemption systems can extend the green on an emergency vehicle's approach or replace the phases and timing for the whole cycle. The Manual on Uniform Traffic Control Devices discusses signal preemption, standards for the phases during preemption, and priorities for different vehicle types that might have preemption capabilities. For Smart Columbus, the expectation is to extend the green phase, or as available, advance to the green phase so as to maximize the ability to flush the queue ahead of the emergency vehicle. This is true regardless of the approach, primary or secondary. The deployed system needs to work along with the existing GTT system along the Cleveland Avenue Corridor. This means that it would need to interface with the existing system or the traffic signal would have to handle requests from multiple systems.

Emergency Vehicles OBUs will only request preemption when the siren is active but will initiate request activities as soon as it is in radio-range of the RSU. No driver interaction is necessary to initiate the request, which will be enabled using the SRM message.

No special hardware outside of that already described for the CVE will be required. Preempt calls to the signal controller are expected to be made using NTCIP 1202 Set statements.

4.3.2.3. PRIORITY RULES

Signal priority will be available to both transit and freight vehicles but only at select CV-equipped intersections. Those which are expected to support signal priority, and the specific type (transit or freight) are listed in Appendix D. Currently, the transit priority-enabled intersections is limited to COTA's C-MAX BRT service along Cleveland Avenue, between Second Avenue and SR-161 / Dublin-Granville Road. Priority for transit vehicles for the CVE will be limited to C-MAX service from Second Avenue to Morse Road. Freight signal priority (FSP) will be enabled at signalized intersections along Alum Creek Drive (between I-270 interchange and SR-317 London-Groveport Road) and Morse Road (between I-270 interchange and Stygler Road).

No special hardware outside of that already described for the CVE will be required. Priority calls to the signal controller are expected to be made using NTCIP 1202 Set statements. When initially deployed, the TSP applications will not directly affect timing operations, but instead, simply be logged and compared with the existing GTT system performance. On the other hand, FSP will be enabled and support both early and extended green depending on the specific intersection timing plan. The approach for each priority-intersection is also annotated in Appendix D.

4.3.2.4. SIGNAL PHASE AND TIMING MESSAGE OUTPUT

The necessary J2735:201603 Signal Phase and Timing (SPaT) message will be produced by the traffic signal controller and transmitted to the RSU (and other locations) using the IP address(es) configured in the signal controller.

4.3.2.5. SSM OUTPUT

The traffic signal controller will be capable of providing status of all preempt and priority requests that are currently pending or being serviced upon the request of the roadside equipment.

4.4. NETWORK DESIGN

The Smart Columbus High-Level Network Design is shown in Figure 15. This illustration depicts the existing CTSS approach whereby a field-hardened Layer 2 switch is installed in each Signal Cabinet and in interconnected, via fiber, to a Communications Node which is comprised of a Layer 3 switch capable of operating in an extended temperature and humidity range. Approximately ten signal cabinets are interfaced with a single communications node. The Layer 2 switch is also connected directly to the traffic signal controller via Ethernet. All of the Communications Nodes are then connected to a Layer 3 switch which resides at the City's TMC, where Centracs, the signal system management software system used by the City, is also hosted. This network is then connected to the City's existing Metronet. All devices on CTSS are IPv4 based.

The CVE Network essentially replicates the CTSS by installing Layer 2 switches (minimum of 2 Ethernet ports) in each signal cabinet and Layer 3 switches (12 ports at a minimum) in the Communications Nodes. Also, like CTSS, these Layer 3 switches are all then interconnected by a Layer 3 switch housed at the TMC. The RSU Management software is then expected to be interconnected to this same switch. Finally, a new firewall, that isolates the CVE Network from the Public Internet will be employed.

Unlike CTSS however, the CVE Network carries both IPv4 and IPv6 traffic. Figure 15 shows the nature (public/private) of the IPv4 and IPv6 address space.

The CVE will connect with at least four (4) external sources via the public internet. These include the Smart Columbus Operating System, the ISS Certificate Authority, the Ohio DOT Continuously Operating Reference Station, and the OBU Vendor Over-the-Air update service.

4.4.1. IP Allocation:

/48 IPv6 prefix provider assigned

/27 IPv4 subnet if possible. Can make do with a /28 if necessary.

4.4.2. Circuit Type/Speed:

Dedicated internet over Ethernet services (Symmetrical upload/download)

Speed- 20-50MB to start. Logical provisioning for future bandwidth upgrades.

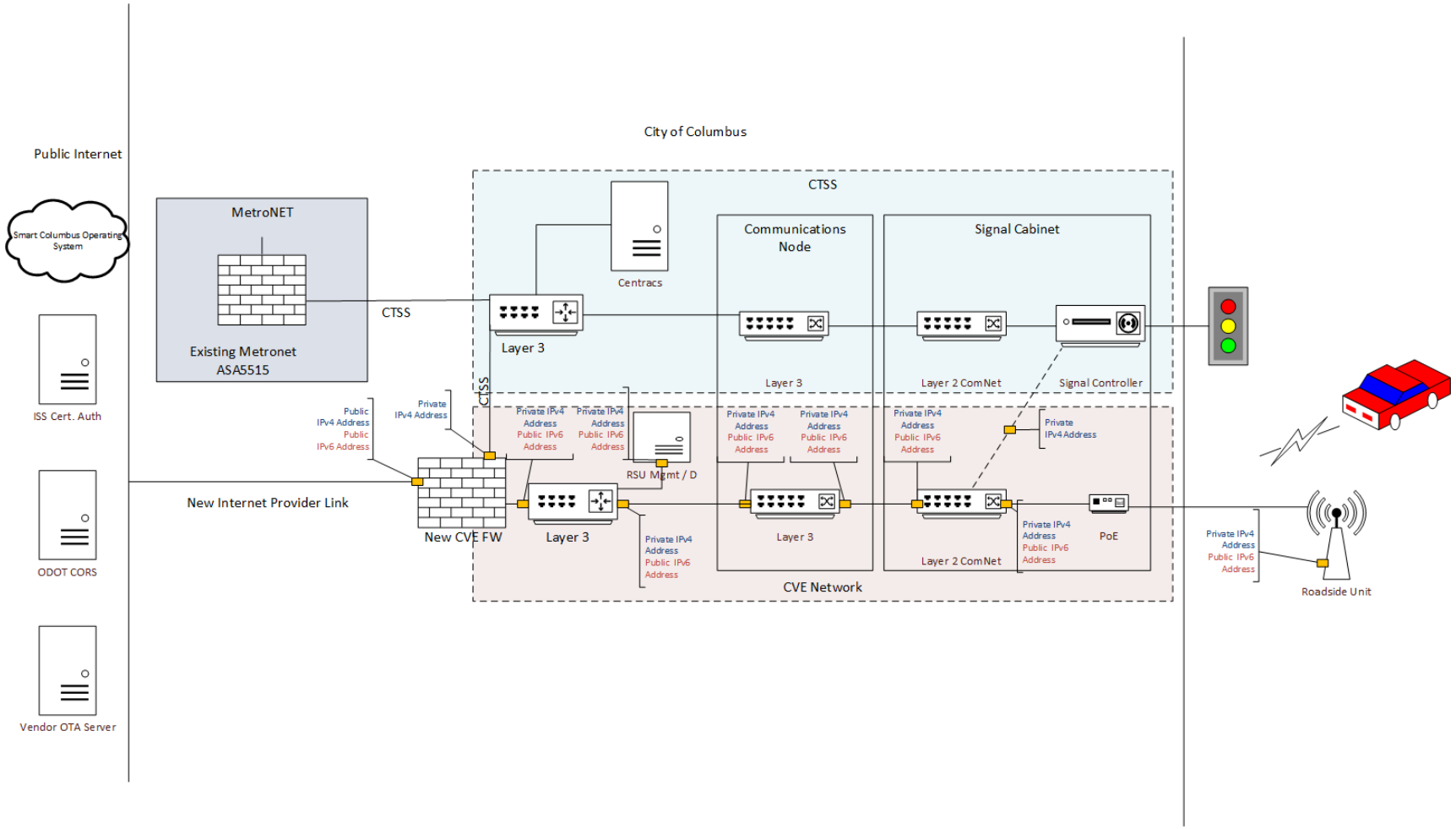

Source: City of Columbus

Figure 15. CVE Hi-Level Network Design

4.5. APPLICATIONS

<<<The design detailed in this section is intended to be representative of the functionality of each application implemented by vendors. There is yet a need to speak with vendors to strike a balance between the detail provided and protecting IP. Additional details will be available and provided after the RSU System Integrator NTP and OBU System Integrator NTP which is anticipated in July 2019.>>>

4.5.1. Vehicle-To-Vehicle Safety Applications

V2V Safety applications are all based on the premise of the communication and processing of BSMs to determine if a potential crash is imminent between a CV-equipped *host vehicle* and approaching *remote vehicle*. The *host vehicle* refers to the vehicle that issues the alert or warning in a safety-critical situation. That is, data in the form of a BSM, or a targeted alert or warning message is received and processed by the host and is used to determine if an alert or warning should be output to the host vehicle operator. The *remote vehicle* broadcasts the BSM that is received by the host vehicle. The methods by which BSMs are processed and warnings issued to a LDV operator are provided in the remaining sections in this chapter.

OBUs installed in all vehicle types (LDV, Transit Vehicle, Emergency Vehicle, HDV) are all capable of performing the remote vehicle generation and broadcast of BSMs. All OBUs can receive BSMs as well, but only LDV OBUs and Transit Vehicle OBUs will utilize the data in those BSMs to determine if a warning is issued to the LDV Operator, or if an Interaction Event is recorded on the Transit Vehicle OBU (see Transit Vehicle Interaction Event Recording).

The subsections contained in this section detail the design for the portions of the system responsible for the generation and broadcast of BSMs, and the receipt and processing of BSMs that supports each V2V Safety application.

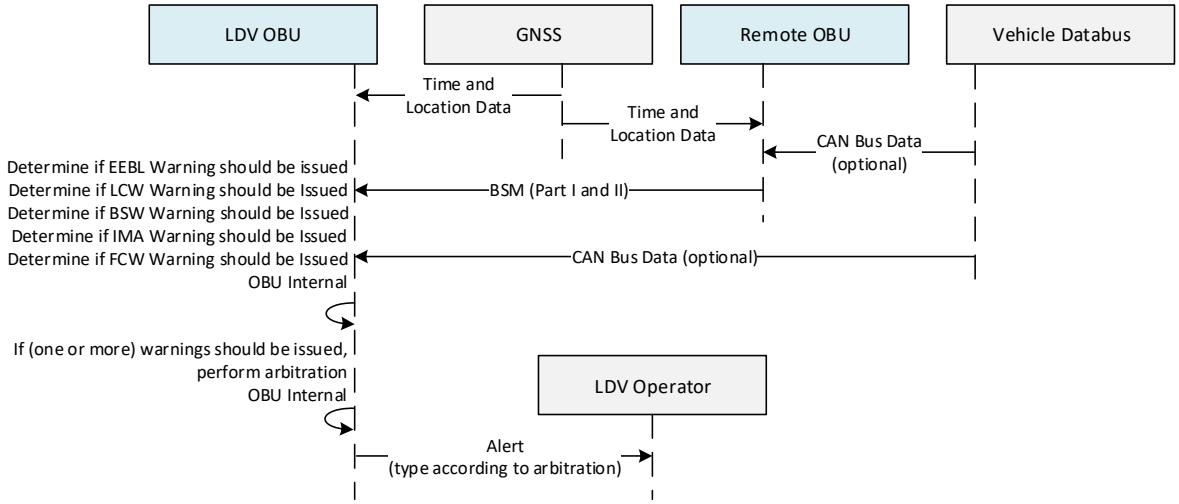

Source: City of Columbus

Figure 16: V2V Safety Sequence Diagram

4.5.1.1. REMOTE VEHICLE BSM PART I GENERATION AND BROADCAST

The generation and broadcast of Part I of the BSM is the foundation of any V2V safety application. Every OBU will broadcast BSMs to enable V2V safety applications on the LDV OBU and Transit Vehicle OBU. For

additional information about the BSM and how its data elements are populated, see the CV Messages section.

4.5.1.2. FORWARD COLLISION WARNING

Forward Collision Warning (FCW) is an application where an LDV Operator is provided a warning to increase awareness of a potential rear-end crash with another leading OBU-equipped vehicle. FCW responds to a direct and imminent threat posed by a remote vehicle directly ahead of a host vehicle.

When the host vehicle receives a BSM from the remote vehicle, the host vehicle determines if a FCW should be issued. A series of conditions should be evaluated to determine if a warning should be issued to the operator of the host vehicle. A forward collision shall be occurring if all the following conditions are concurrently met:

1. The OBU-equipped (host) vehicle is in the path of travel of the OBU-equipped (remote) vehicle. This is determined by assessing the host vehicle's current position and width, projecting its movement forward in the direction of the host vehicle's heading, and determining if any portion of the remote vehicle falls within the host vehicle's projected path.
2. The OBU-equipped (host) vehicle is moving in the same direction of travel as the remote vehicle. The heading of the host vehicle is compared against the heading of the remote vehicle. The heading of the remote vehicle is determined by looking at the *heading* data element in the BSM received from the remote vehicle. If the heading of the remote vehicle falls within a configurable range (i.e. ± 10 degrees) of the heading of the host vehicle, then this condition is satisfied. Note that heading values 'wrap-around' from 0 to 360 degrees.
3. The distance (d) between the center point of the OBU-equipped (host) vehicle and OBU-equipped (remote) vehicle is less than a critical distance threshold (d_C) that represents the stopping distance. The distance (in feet) between two vehicle center points (d) is calculated using the Haversine Equation:

   $d = 20902464\left(2\ \mathrm{atan2}\left(\sqrt{1-a}, \sqrt{a}\right)\right)$, where
   - $a = \sin^2\left(\frac{Y_R - Y_H}{2}\right) + \cos(Y_H)\cos(Y_R)\sin^2\left(\frac{X_R - X_H}{2}\right)$
   - Y_R is the latitude of the remote vehicle (converted to radians)
   - X_R is the longitude of the remote vehicle (converted to radians)
   - Y_H is the latitude of the host vehicle (converted to radians)
   - X_H is the longitude of the host vehicle (converted to radians)

   The critical distance threshold (d_C) (in feet) represents the distance covered while decreasing speed and is calculated using the following equation which takes into account driver reaction time, the speed of the host and remote vehicles, the lengths of the host and remote vehicles, and expected communications/processing latency.

   $d_C = 1.47V_H(t_{PR} + t_L) + \frac{(V_H - V_R)^2}{30\left(\frac{a}{32.2} \mp G\right)} + \frac{L_H}{2} + \frac{L_R}{2}$ where
   - V_H is the speed of the host vehicle (mph)
   - t_{PR} is the perception/reaction time (s)
   - t_L is the expected communications/processing latency (s)
   - a is the normal deceleration rate; typically 11.2 (ft/s^2)
   - G is the grade; location-dependent, but typically 0 (%)
   - L_H is the length of the host vehicle (ft)
   - L_R is the length of the remote vehicle (ft)

   If $d < d_C$, then this condition is satisfied

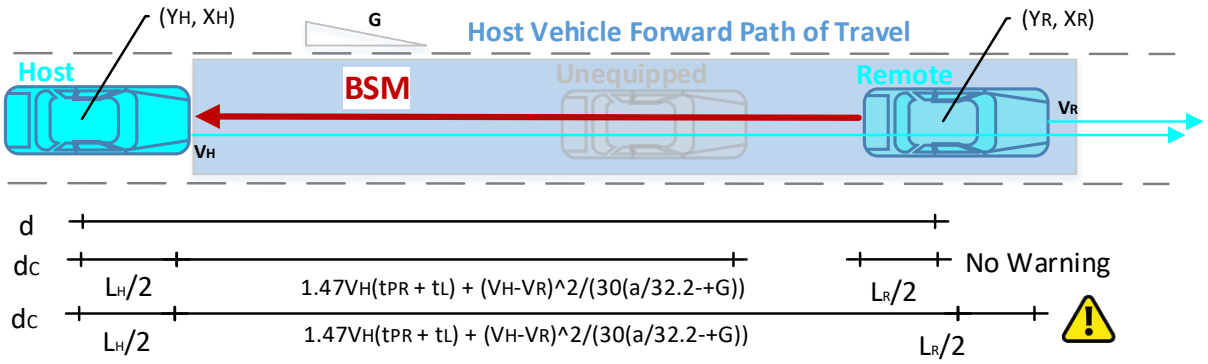

(figure is not to scale)

Source: City of Columbus

Figure 17: Forward Collision Warning Example

4.5.1.3. EMERGENCY ELECTRONIC BRAKE LIGHT WARNING

Emergency Electronic Brake Light (EEBL) warning is an application where LDV Operators are alerted when an OBU-equipped vehicle in the traffic stream ahead exhibits deceleration exceeding a preset parameter. This alert is received from one or more vehicles in the same lane ahead but not the immediate vehicle ahead. This provides the driver with additional time to look for, and assess situations developing ahead.

Emergency braking ahead shall be occurring if all of the following conditions are concurrently met:

1. An OBU-equipped (remote) vehicle is braking in an emergency fashion. This is determined by looking at the *brakeBoost* data element in the BSM received from the remote vehicle. If the data element is set to 1, then this condition is satisfied.
2. The OBU-equipped (host) vehicle is in the path of travel of the OBU-equipped (remote) vehicle. This is determined by assessing the host vehicle's current position and width, projecting its movement forward in the direction of the host vehicle's heading, and determining if any portion of the remote vehicle falls within the host vehicle's projected path.
3. The distance (d) between the center point of the OBU-equipped (host) vehicle and OBU-equipped remote) vehicle is less than a critical distance threshold (d_C) that represents the distance covered while decreasing speed.
   The distance (in feet) between two vehicle center points (d) is calculated using the Haversine Equation:

   $d = 20902464\left(2\,\text{atan2}\left(\sqrt{1-a},\sqrt{a}\right)\right)$, where

   - $a = \sin^2\left(\frac{Y_R - Y_H}{2}\right) + \cos(Y_H)\cos(Y_R)\sin^2\left(\frac{X_R - X_H}{2}\right)$
   - Y_R is the latitude of the remote vehicle (converted to radians)
   - X_R is the longitude of the remote vehicle (converted to radians)
   - Y_H is the latitude of the host vehicle (converted to radians)
   - X_H is the longitude of the host vehicle (converted to radians)

   The critical distance threshold (d_C) (in feet) represents the stopping distance, and is calculated using the following equation which takes into account driver reaction time, the speed of the host vehicle (remote vehicle assumed to be stopped), the lengths of the host and remote vehicles, and expected communications/processing latency.

   $d_C = 1.47V_H(t_{PR} + t_L) + \frac{(V_H)^2}{30\left(\frac{a}{32.2} \mp G\right)} + \frac{L_H}{2} + \frac{L_R}{2}$ where

   - V_H is the speed of the host vehicle (mph)

- t_{PR} is the perception/reaction time (s)
- t_L is the expected communications/processing latency (s)
- a is the normal deceleration rate; typically 11.2 (ft/s^2)
- G is the grade; location-dependent, but typically 0 (%)
- L_H is the length of the host vehicle (ft)
- L_R is the length of the remote vehicle (ft)

If $d < d_C$, then this condition is satisfied

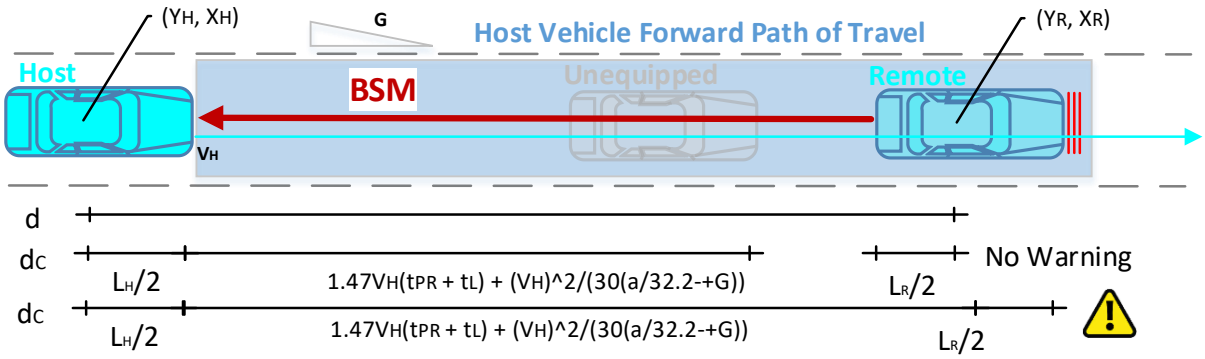

(figures is not to scale)

Source: City of Columbus

Figure 18: Emergency Electronic Brake Light Warning Example

4.5.1.4. INTERSECTION MOVEMENT ASSIST

<<<More details needed from OBU integrator to determine what they are looking for when determining when to issue IMA. Additional details will be available and provided after the OBU System Integrator NTP which is anticipated in July 2019.>>>

Intersection Movement Assist (IMA) is an application that uses the HMI to warn LDV Operators of a potential collision when two or more OBU-equipped vehicles are approaching one another using the relative position, speed and heading of those vehicles. IMA receives BSMs from approaching vehicles adjacent to the vehicle equipped with IMA. If IMA determines there is a high probability of a collision, the HMI warns the driver.

An intersection collision shall be imminent if all of the following conditions are concurrently met:

1. The OBU-equipped (host) vehicle has a trajectory (based on position, speed, acceleration, elevation) that may interfere with an OBU-equipped (remote) vehicle trajectory in a side impact fashion.
2. The distance between the OBU-equipped (host) vehicle and OBU-equipped (remote) vehicle is less than a distance threshold that is a function of the speed of the host vehicle and the remote vehicle.

The following conditions should be considered when determining if an IMA should be issued:

1. Driver reaction time
2. Expected communications latency
3. Expected processing latency

4.5.1.5. LANE CHANGE WARNING AND BLIND SPOT WARNING

A vehicle shall be in a blind spot if all of the following conditions are concurrently met:

1. The OBU-equipped (host) vehicle is traveling in the same direction as the OBU-equipped (remote) vehicle.
2. The OBU-equipped (remote) vehicle is in a configurable zone (rear left and rear right of the OBU-equipped host vehicle) with a configurable amount of confidence (factors that affect confidence include positioning error for the host and remote vehicle)

The zones are generally located behind the driver's field of vision on the right and left sides of the vehicle and remain in a constant position with respect to the vehicle. When the host vehicle receives a BSM from a remote vehicle, the host vehicle uses its location and heading to determine the geographic areas enclosed by the configured zones. A BSM received from a remote vehicle contains the position of the remote vehicle. This position (representing the remote vehicle's physical center point) is compared against the geographic zones. If the point does not fall within the geographic zone, then no warning is issued. No warnings are issued when an unequipped vehicle enters the geographic area, as there is no method by which the unequipped vehicle is able to communicate to the host vehicle. If the point falls inside either of the zones, then a warning is issued to the LDV Operator or an event is recorded on a Transit Vehicle OBU.

Figure 19 provides an example of a vehicle passing through the configurable zones while performing a passing maneuver.

The width of the zone on each side of the host vehicle should be wide enough to account for one vehicle-width in each adjacent lane. The length of the zone trailing the Host Vehicle may vary according the speed of the host vehicle, getting longer as the speed of the host vehicle increases – this is done to advise against lane changes that result in a close following distance for the remote vehicle after the lane change is made.

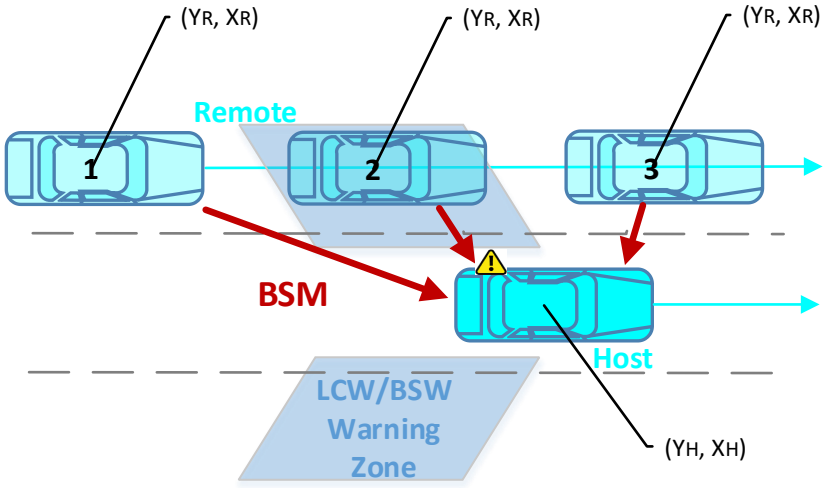

(figure is not to scale)

Source: City of Columbus

Figure 19: Lane Change Warning/Blind Spot Warning Example

4.5.2. Red Light Violation Warning

The Red Light Violation Warning (RLVW) application enables a connected vehicle approaching a signalized intersection to receive information about the signal timing and geometry of the intersection. The application in the vehicle uses its speed and acceleration profile, along with the signal timing and geometry information, to determine if it appears that the vehicle will enter the intersection in violation of a traffic signal. If the

violation seems likely to occur, a warning can be provided to the vehicle operator. This application provides an output to drivers to improve awareness when approaching a signal that will turn red before arriving at the intersection to address crashes between multiple vehicles at intersections.

The RSU broadcasts SPaT, MAP, and RTCM which is received by the OBU. The OBU determines the position of the vehicle within the MAP. This requires the vehicle to receive its current position via GNSS and correcting it using the data contained in the RTCM. Next the OBU determines if it is within any of the ingress approaches to the intersection. If it is determined that the vehicle is not located along any of the ingress approaches, then no warning is issued. However, if the OBU determines that the vehicle is on one of the ingress lane approaches, then the signal state for that approach must next be determined. The ingress approach lane geometry indicated in the MAP message is associated with one or more connections (to egress lanes). Each connection has an associated SignalGroupID, which allows data from the SPaT message to be joined back to each connection and approach.

	3	5	7	3		
	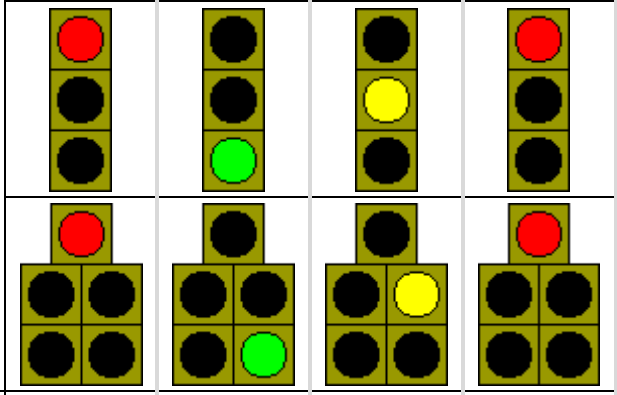					
Protected-only Phase Progression (left turn, right turn)	3	6	8	3		
	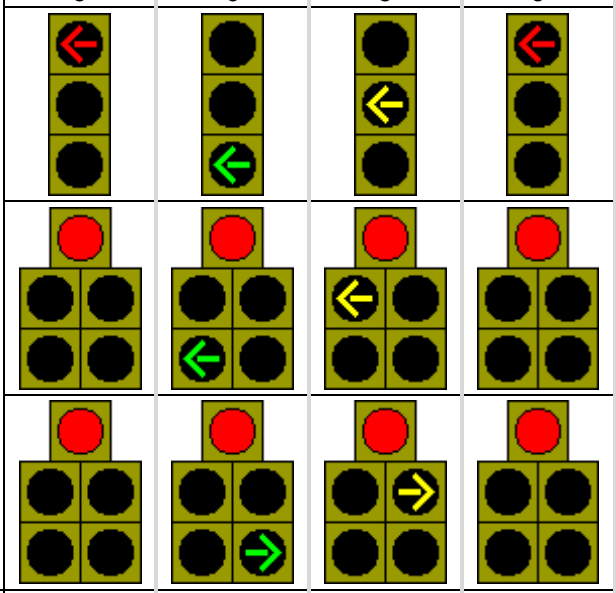					
Protected-Permissive Phase Progression (left turn)	3	6	8	5	7	3
	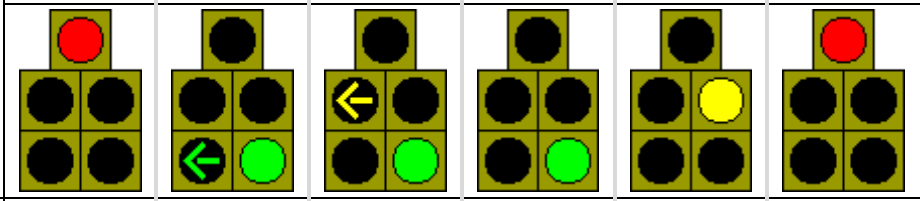					
Right Turn Pseudo-lap	3	6	6	6	8	3
	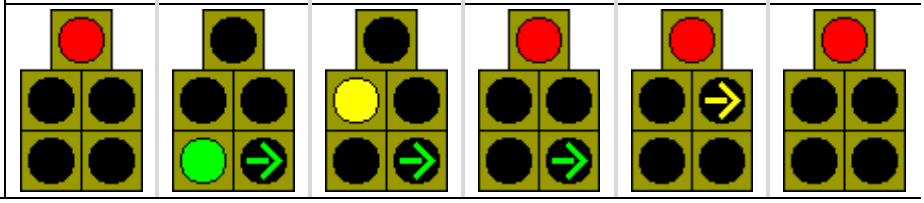					

Source: City of Columbus

Figure 20: MovementPhaseState Values ofTypical Signal State Progressions

A Red-Light Violation is imminent if any of the following conditions are met:

1. The host vehicle crosses the stop bar on a red signal indication at any speed. Exception for vehicles that come to a complete stop prior to crossing stop bar with flashing red or where right turn on red is permitted. The relevant signal state is determined by looking at the *movementPhaseState* data element (SPaT Message) for the approach lane the vehicle is traveling in. The geometry for all approach lanes is contained in the MAP message. The host vehicle's current position is compared against each lane geometry in the MAP message to determine which approach the vehicle is on.
2. Given the host vehicle's current speed, the front of host vehicle will cross the stop bar after the phase changes to red. The amount of time until the phase changes to red is determined by assessing the *minEndTime*, *maxEndTime*, and *likelyTime* data elements in the SPaT message. The amount of time (in seconds) it takes the host vehicle to cross the stop bar (t) at its current speed is calculated using a modified version of the Haversine Equation:

   $t = \frac{20902464\left(2\ \mathrm{atan2}\left(\sqrt{1-a},\sqrt{a}\right)\right)}{1.47\ V_H}$, where
   - $a = \sin^2\left(\frac{Y_{SB}-Y_H}{2}\right) + \cos(Y_H)\cos(Y_{SB})\sin^2\left(\frac{X_{SB}-X_H}{2}\right)$
   - Y_{SB} is the latitude of the position of the stop bar of the lane that the Host vehicle is traveling in (converted to radians)
   - X_{SB} is the longitude of the position of the stop bar of the lane that the Host vehicle is traveling in (converted to radians)
   - Y_H is the latitude of the host vehicle (converted to radians)
   - X_H is the longitude of the host vehicle (converted to radians)
   - V_H is the speed of the host vehicle (mph)

   If the calculated time is greater than the amount of time until the phase change, then the condition is satisfied
3. During a red signal state, the host vehicle is traveling too quickly to be able to decelerate to a stop prior to crossing the stop bar at a normal deceleration rate. The relevant signal state is determined by looking at the *movementPhaseState* data element (SPaT Message) for the approach lane the vehicle is traveling in. The geometry for all approach lanes is contained in the MAP message. The host vehicle's current position is compared against each lane geometry in the MAP message to determine which approach the vehicle is on.
   The distance (d) between the center point of the OBU-equipped (host) vehicle and the stop bar vehicle is less than a critical distance threshold (d_C) that represents the stopping distance.
   The distance (in feet) between the vehicle center point and the stop bar (d) is calculated using the Haversine Equation:
   $d = 20902464\left(2\ \mathrm{atan2}\left(\sqrt{1-a},\sqrt{a}\right)\right)$, where
   - $a = \sin^2\left(\frac{Y_{SB}-Y_H}{2}\right) + \cos(Y_H)\cos(Y_{SB})\sin^2\left(\frac{X_{SB}-X_H}{2}\right)$
   - Y_{SB} is the latitude of the position of the stop bar of the lane that the Host vehicle is traveling in (converted to radians)
   - X_{SB} is the longitude of the position of the stop bar of the lane that the Host vehicle is traveling in (converted to radians)
   - Y_H is the latitude of the host vehicle (converted to radians)
   - X_H is the longitude of the host vehicle (converted to radians)

   The critical distance threshold (d_C) (in feet) represents the stopping distance and is calculated using the following equation which takes into account driver reaction time, the speed of the host vehicle, the length of the host vehicle, and expected communications/processing latency.

$$d_C = 1.47V_H(t_{PR} + t_L) + \frac{(V_H)^2}{30\left(\frac{a}{32.2} \mp G\right)} + \frac{L_H}{2}$$

   - V_H is the speed of the host vehicle (mph)
   - t_{PR} is the perception/reaction time (s)
   - t_L is the expected communications/processing latency (s)

- a is the normal deceleration rate; typically 11.2 (ft/s^2)
- G is the grade; location-dependent, but typically 0 (%)
- L_H is the length of the host vehicle (ft)

If $d < d_C$, then this condition is satisfied

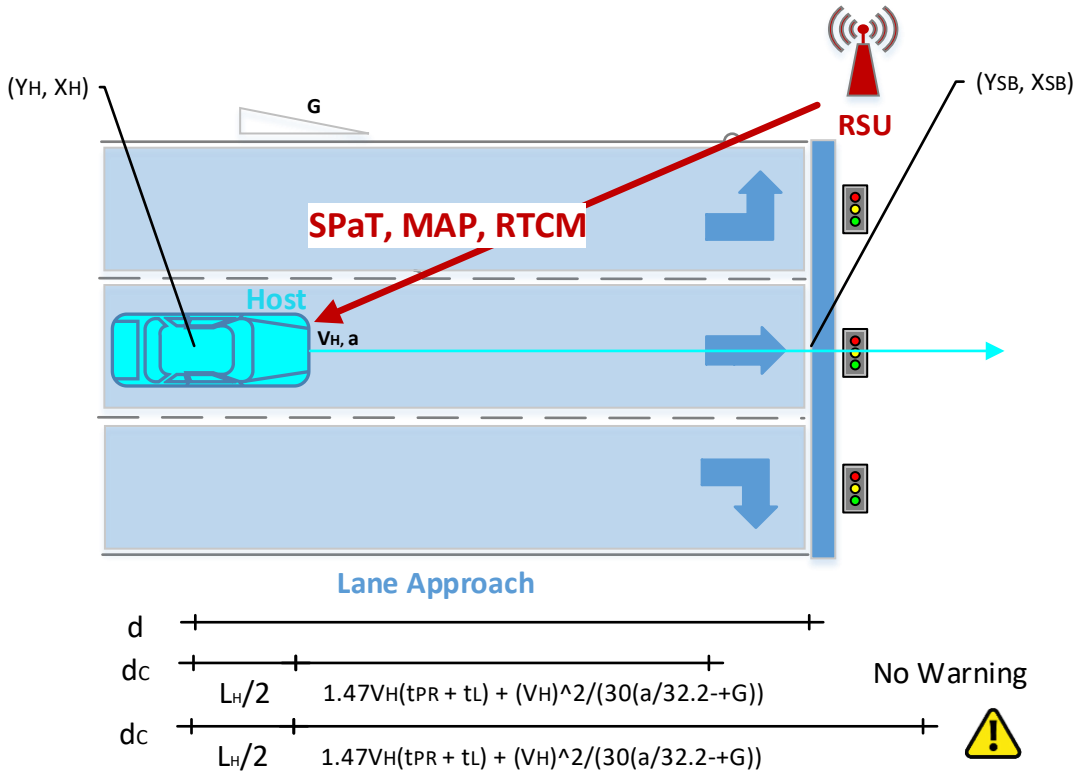

Source: City of Columbus

Figure 21: Red Light Violation Warning Example

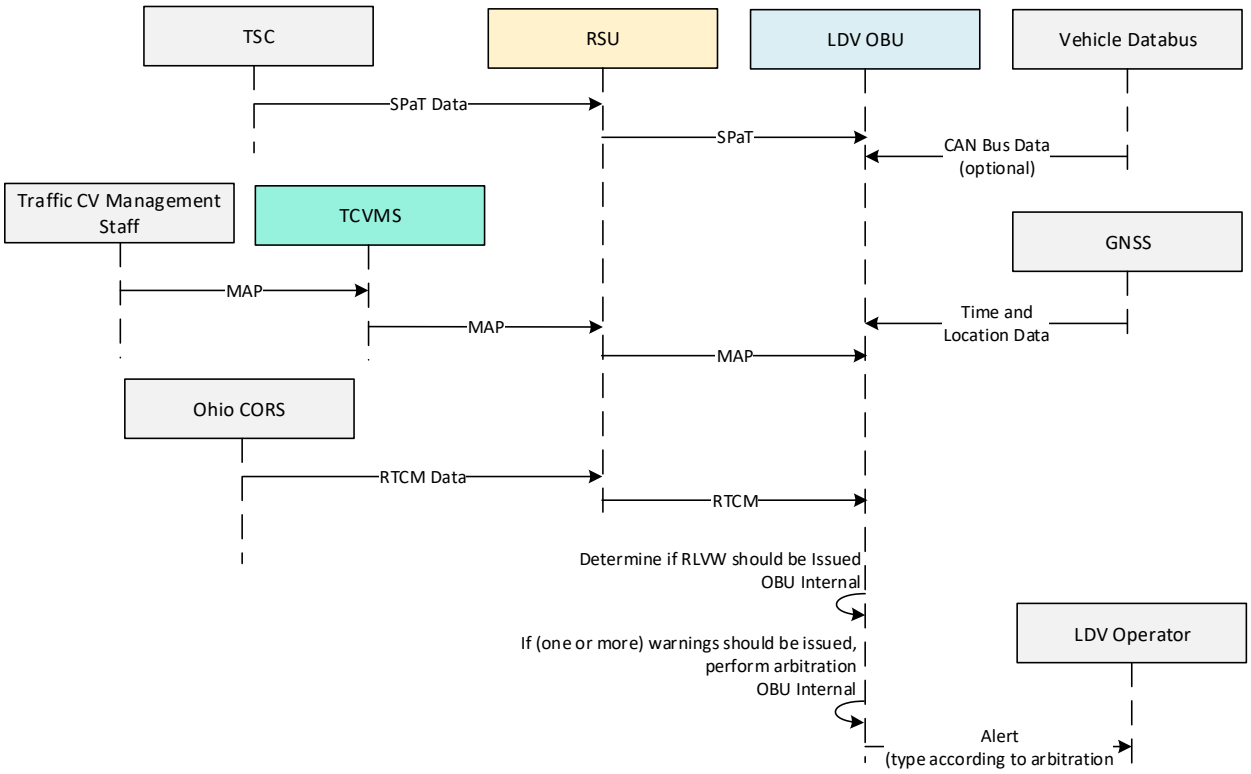

Source: City of Columbus

Figure 22: Red Light Violation Warning Sequence Diagram

4.5.3. Reduced Speed School Zone

The Reduced Speed School Zone (RSSZ) application provides connected vehicles with information on a school zone's posted speed limit (generally 20 mph). The RSSZ application inside the CV uses the school zone location and speed limit, vehicle location, and the speed of the vehicle to determine whether to alert or warn the vehicle operator. The application will provide an alert to vehicle operators upstream of the school zone when braking is required to reduce to the school zone speed limit. This output increases driver awareness to active school zones and the school zone speed limit to reduce speed when in school zones.

Traffic CV Management Staff enter RSM Information at the TMC. This includes the geometry of the school zone, the geometry of the approach to the school zone, the school zone speed limit, and the RSU from which the RSM is broadcast from. The Traffic CV Management checks the format of the inputs, generates the RSM, and sends it to the specified RSU. The following table specifies which RSUs will broadcast RSMs and the respective school zones which will be represented in the RSM.

Table 3: List of RSUs that Broadcast SRMs

School Name	Intersection ID	Intersection Name
Linden STEM Academy	3023	Aberdeen Ave. at Cleveland Ave.
	3024	Cleveland Ave. at Weber Rd.
Clinton Elementary	4036	High St. at North Broadway
	4037	High St. at Oakland Park Ave.
Our Lady of Peace School	4044	Dominion Blvd. at High St.
	4045	High St. at Weisheimer Rd.

Source: City of Columbus

The RSU receives the RSM and stores it in local memory to prepare for broadcast. The next step is for the RSU to receive an indication of whether or not the school zone signal is activated (flashing). All school zone signals are locally activated (i.e. not activated through a central system), and thus roadside detection of the school zone being active is also performed locally. This indication is provided by a detector measuring voltage across or current to the school zone signal. If the detector indicates that the school zone is active, then the RSU broadcasts the RSM. Likewise, if the detector indicates that the school zone is not active, the RSU does not broadcast the RSM.

A vehicle approaching the active school zone receives the RSM. It uses information from GNSS, the vehicle data bus and the RTCM message (received from the RSU) to position itself in the environment, and to determine if a school zone warning should be issued to the vehicle operator. A Reduced Speed School Zone Warning should be issued if any of the following conditions are met:

1. The host vehicle is in the school zone traveling above the school zone speed limit. The geometry of the school zone is contained in the RSM. The host vehicle's current position is compared against the school zone geometry to determine if is in in the school zone. If so, the vehicle's speed is compared against the school zone speed limit. If the speed of the host vehicle is greater than the school zone speed, then this condition is satisfied.
2. While in the School Zone Approach Zone, the host vehicle is traveling too quickly to be able to decelerate to the school zone speed limit at a normal deceleration rate. The geometry of the school zone approach is contained in the RSM. The host vehicle's current position is compared against the school zone approach geometry to determine if is in in the approach. If so, the vehicle's distance to the school zone is calculated using the Haversine Equation.
   The distance (in feet) between the vehicle center point and the school zone (d) is calculated using the Haversine Equation:

   $d = 20902464\left(2\ \mathrm{atan2}\left(\sqrt{1-a}, \sqrt{a}\right)\right)$, where
   - $a = \sin^2\left(\frac{Y_{SZ}-Y_H}{2}\right) + \cos(Y_H)\cos(Y_{SZ})\sin^2\left(\frac{X_{SZ}-X_H}{2}\right)$
   - Y_{SZ} is the latitude of the position of the beginning of the school zone of the lane that the Host vehicle is traveling in (converted to radians)
   - X_{SZ} is the longitude of the position of the beginning of the school zone of the lane that the Host vehicle is traveling in (converted to radians)
   - Y_H is the latitude of the host vehicle (converted to radians)
   - X_H is the longitude of the host vehicle (converted to radians)

The critical distance threshold (d_C) (in feet) represents the distance covered while decreasing spped, and is calculated using the following equation which takes into account driver reaction time, the speed of the host vehicle, the length of the host vehicle, and expected communications/processing latency.

$$d_C = 1.47V_H(t_{PR} + t_L) + \frac{(V_H - V_{SZ})^2}{30\left(\frac{a}{32.2} \mp G\right)} + \frac{L_H}{2}$$

- V_H is the speed of the host vehicle (mph)
- V_{SZ} is the speed limit of the school zone (mph)
- t_{PR} is the perception/reaction time (s)
- t_L is the expected communications/processing latency (s)
- a is the normal deceleration rate; typically 11.2 (ft/s^2)
- G is the grade; location-dependent, but typically 0 (%)
- L_H is the length of the host vehicle (ft)

If $d < d_C$, then this condition is satisfied

Once the vehicle has passed through the school zone, warnings cease being issued.

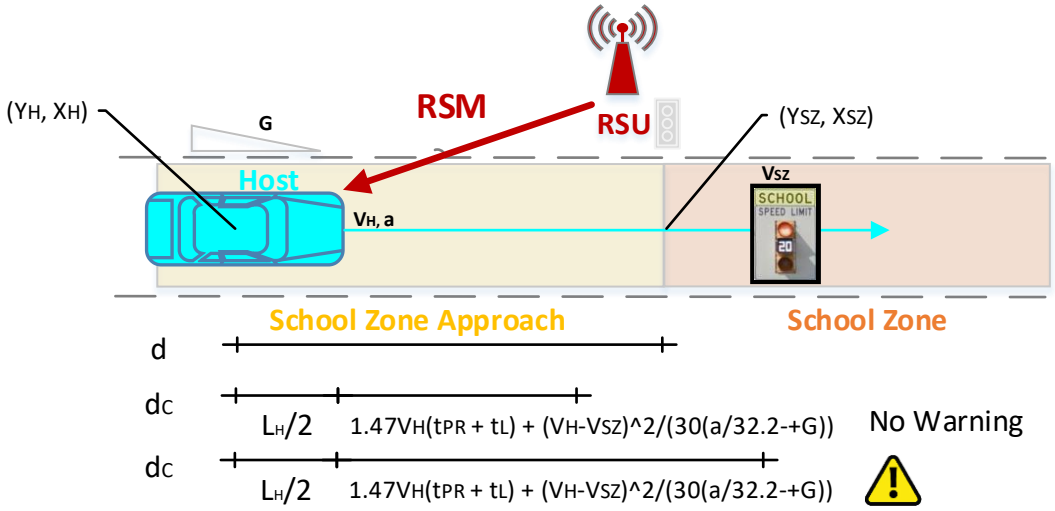

Source: City of Columbus

Figure 23: Reduced Speed School Zone Example

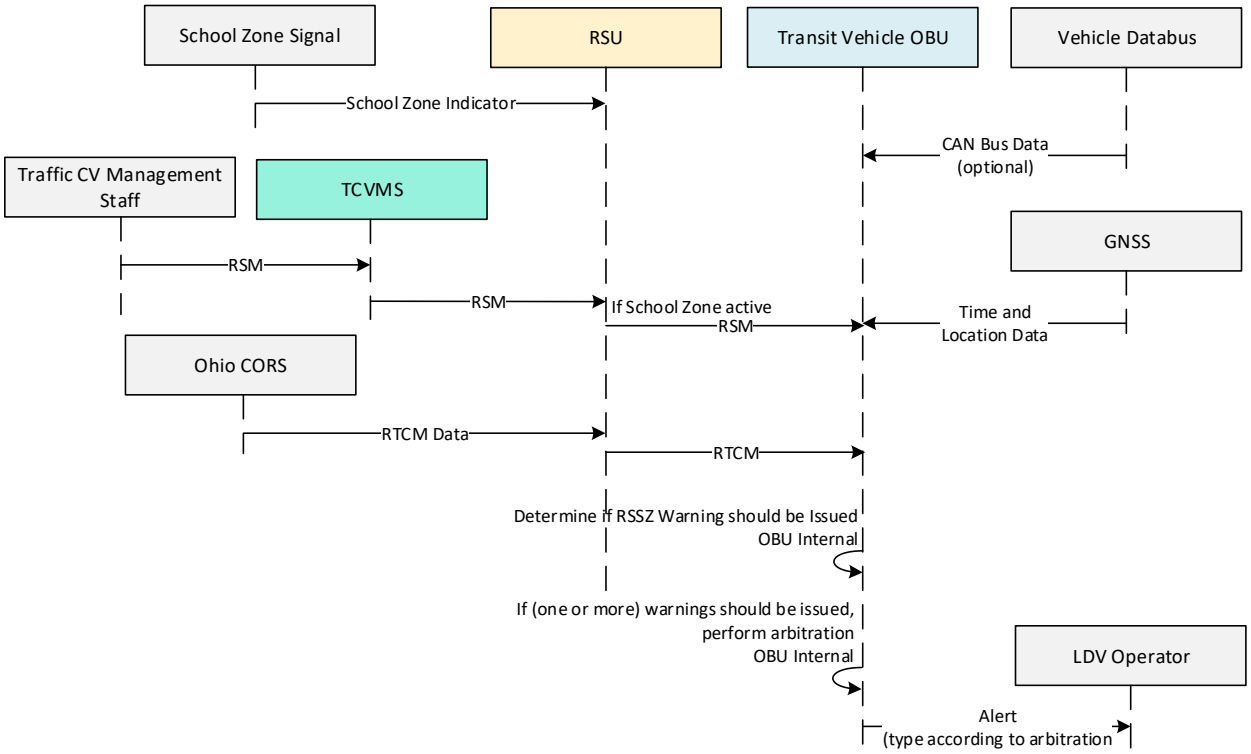

Source: City of Columbus

Figure 24: Reduced Speed School Zone Sequence Diagram

4.5.4. Traffic Signal Priority/Preemption

Traffic Signal Priority/Preemption application provides a means for the CVE system to grant signal priority to transit vehicles and HDVs and signal preemption to emergency vehicles at intersections along arterial corridors. The first step in this process is the generation and broadcast of a Signal Request Message (SRM) from the OBU to the RSU.

The OBU must have received a MAP message to determine which intersection it is approaching. The MAP message contains the intersection geometries (e.g. intersection centerpoint and series of lane centerline points), IntersectionID, ApproachIDs, LaneIDs, and LaneConnectionIDs. The OBU uses information about the vehicle's location and heading (from GNSS) and compares it to the intersection centerpoint (or other fixed reference point, such as the end of an approach lane, i.e. stopbar) to determine if the vehicle is approaching the intersection. The IntersectionID element in the MAP message is used to populate the IntersectionID element in the SRM, and the SRM is only broadcast when the OBU is approaching the intersection and is less than a specified distance from the intersection. This distance is expected to be a function of the amount of time the current phase will need to clear, the time for a queue to clear (if a queue-flushing preempt strategy is requested), and the speed of the approaching emergency vehicle. This distance is expected to range from between 500-1500 feet upstream of the intersection that priority is being requested at.

Once all data fields for the SRM are populated, it is determined that the vehicle is approaching the intersection and is less than the specified distance from the intersection, the SRM is broadcast by the OBU. The RSU receives this SRM and uses the data and metadata of the received SRM to determine if the requesting vehicle is authorized to receive priority or preemption. A Signal Priority Authorization List is used by the RSU to determine if the request should be authorized. The Signal Priority Authorization List specifies

valid combinations of criteria that must be met to grant the request and is maintained by Traffic CV Management Staff. A number of factors to consider when building the Signal Priority Authorization List are provided in Appendix D.

When an RSU receives the SRM, the RSU compares data contained in the SRM against each combination of the criteria in the Priority Authorization List to determine if the priority or preemption request is granted and forwarded on to the traffic signal controller. These are outlined in the bulleted list below:

- Intersection ID in the SRM must match the Intersection ID of the MAP message being broadcast from the RSU. Note that MAP messages are broadcast from RSUs co-located with the signalized intersection defined in the MAP message.
- Intersection ID in the SRM must match an Intersection ID in the Priority Authorization List
- Vehicle ID in the SRM metadata should match the VehicleID in the Priority Authorization List.
- ApproachID in the SRM must match with the approach specified in the Priority Authorization List
- Connection ID in the SRM must match with the connection specified in the Priority Authorization List
- The local time on the RSU must be within the Valid Time and Valid Days criteria.

If all criteria are met, and the vehicle is authorized, the RSU communicates with the traffic signal controller to execute priority or preemption (specified in the SRM). The controller implements a signal phase timing change depending on whether priority or preemption was granted. Note that for an authorized priority request, the traffic signal controller will either provide an early green or extended green for the phase associated with the connection ID specified in the SRM. For an authorized preemption request, the traffic signal controller will interrupt the current phase (complete it in an expedient manner as possible) and proceed directly to the phase associated with the connection ID specified in the SRM. The traffic signal controller's internal response to receiving a request to execute a priority or preemption strategy is defined in Appendix D.

The RSU sends the SSM to inform approaching vehicles about the status of each received request. When the OBU receives an SSM, it checks the list of requests being serviced to determine if the request that the OBU made has been included. If the SSM indicates that request is denied, the vehicle OBU ceases broadcasting the SRM. Similarly, if the SSM indicates that the request is granted and in the process of being serviced, then the vehicle ceases broadcasting the SRM. However, there may be a case where a request is being serviced, but the vehicle that made the request was not able to make it through the intersection after the request had been serviced. If an OBU previously received an indication from the SSM that the request was being serviced and stops receiving this indication for <<<*TBD*>>> seconds despite not having passed through the intersection, the OBU broadcasts a new SRM, and the above process is repeated until the vehicle passes through the intersection.

While processing a particular request, additional requests may be received. In the case where multiple priority requests are granted, the requests will be serviced sequentially. The only exception for the sequential servicing of requests is when a new priority request can be serviced during the same phase as a previously-granted priority request. In this case, the requests are serviced simultaneously with the initial request. However, in the case where a priority request is being serviced, and a preemption request is granted, then signal operations will be immediately adjusted to first service the preemption request and then service the priority request. This change in order is reflected in the SSM. Finally, all preemption requests are serviced in the same order in which they are received, unless a new preemption request can be serviced during the same phase as a previously-granted preemption request. In this case, the requests are serviced simultaneously with the initial request.

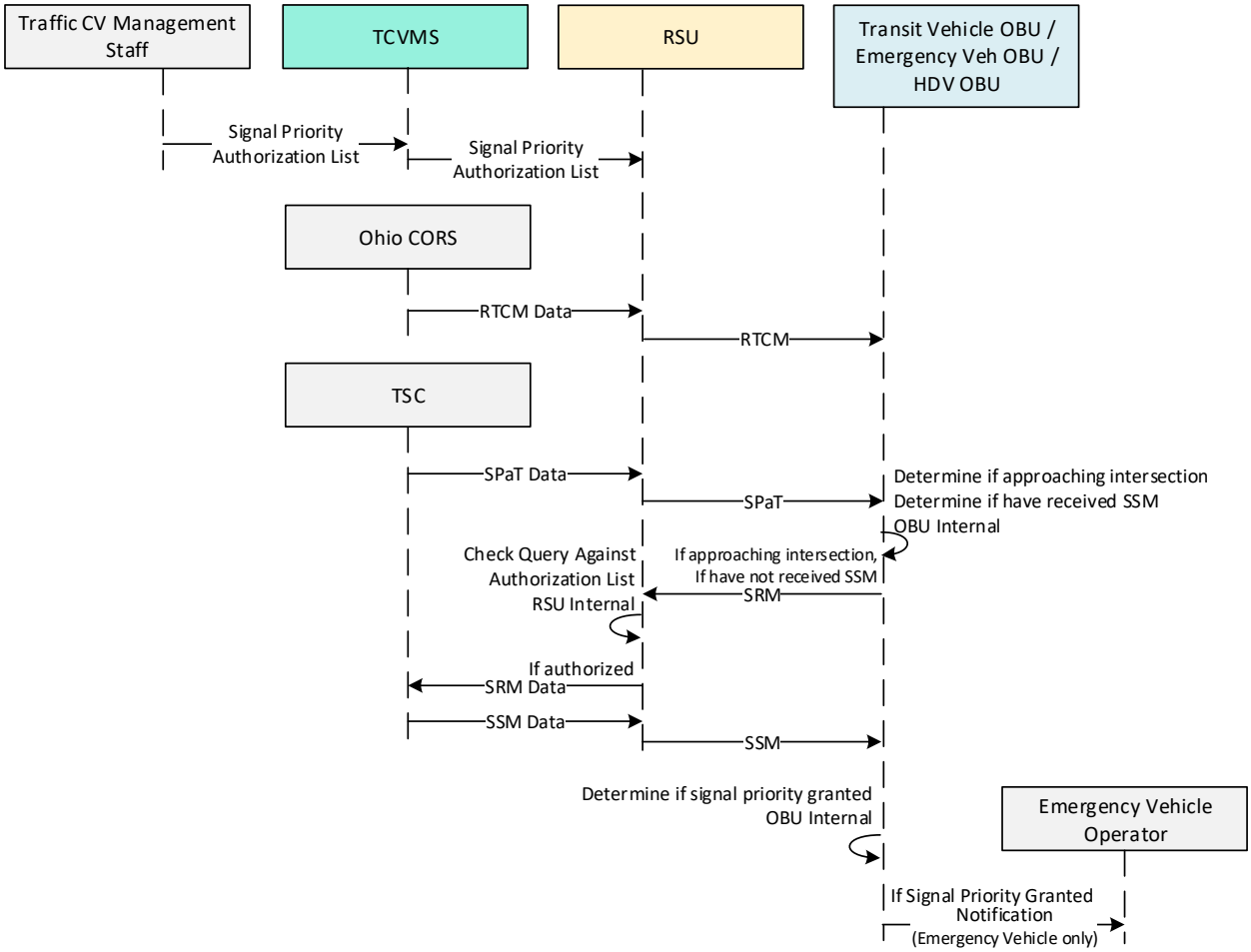

Source: City of Columbus

Figure 25: Traffic Signal Priority Sequence Diagram

4.5.5. Vehicle Data for Traffic Operations (VDTO)

VDTO essentially involves capturing all DSRC messages sent from or received by RSUs and sending them to the Traffic CV Management System (TCVMS) where they are archived.

- BSMs are produced by all CV-equipped vehicles. As all CV-equipped vehicles travel within DSRC range of an RSU, the BSM is captured by the RSU and is forwarded to the TCVMS. TCVMS staff configure the rate which captured BSMs on the roadside are forwarded to the TCVMS to conserve the amount of memory required to store CV data (by default, the RSU forwards all captured BSMs to the TCVMS). The TCVMS archives all BSMs received by RSUs. Since the same BSM may be received by multiple RSUs, the TCVMS will identify and eliminate any duplicate BSMs that it receives.
- SPaT message data are received by the RSU from the traffic signal controller. The RSU takes this data to form the SPaT message. To conserve the amount of memory required to store SPaT Messages, only messages where the MsgCount data element resets to 0 are forwarded by the RSU to the TCVMS to be archived – this indicates a SPaT message where the message content has changed from the prior SPaT message sent.
- SRMs are produced by certain CV-equipped vehicles and received by RSUs. The SRM is expected to contain an intersection ID index. When the SRM received by an RSU contains the intersection ID

index that corresponds to that RSU, then the received SRM is forwarded to the TCVMS to be archived

- SSM message data are received by the RSU from the traffic signal controller. The RSU takes this data to form the SSM message. To conserve the amount of memory required to store SPaT Messages, only messages where the MsgCount data element resets to 0 are forwarded by the RSU to the TCVMS to be archived – this indicates a SSM message where the message content has changed from the prior SSM message sent.
- RSMs are broadcast from select RSUs when corresponding school zone signals are flashing. Each RSM that is broadcast from the RSU is forward to the TCVMS to be archived.
- MAP message data are input to the TCVMS by TCVMS staff and forwarded to the specified RSU. The MAP message is archived by the TCVMS when input by TCVMS Staff.

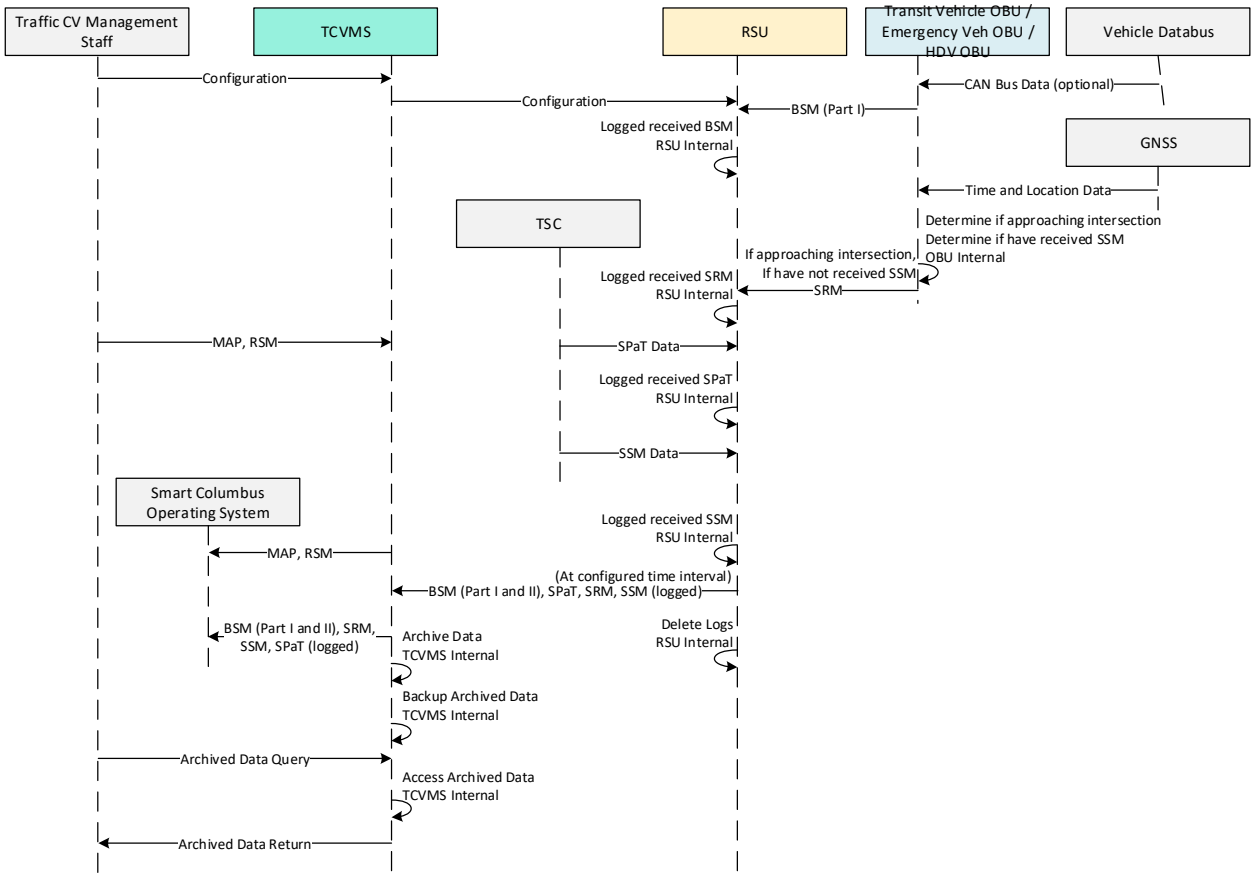

Source: City of Columbus

Figure 26: Vehicle Data for Traffic Operations Sequence Diagram

4.5.6. Transit Vehicle Interaction Event Recording

Transit Vehicle Interaction Event Recording (TVIER) is an application that records certain events on Transit Vehicle OBUs as they travel on area roadways. TVIER records all message types sent and received by the transit vehicle OBU, and also generates and records 'events.' These events primarily correspond to the generation of warnings from V2V Safety and V2I Safety applications (Note: On Transit Vehicle OBUs, these warnings are generated for internal purposes only, and are not output to the transit vehicle operator). Events

also include the broadcast of SRMs and receipt of SSMs. TrCVMS staff configure the period of time before and after each event which messages sent/received are saved and are associated with the event.

All recorded messages and events are offloaded from the Transit Vehicle OBU when the Transit Vehicle returns to the garage after each day of service. In the situation where a Transit Vehicle OBU attempts to record more events than onboard memory allows, the oldest recorded events are overwritten by new events until memory is freed up when event data is offloaded at the COTA garage.

- BSMs are produced by all CV-equipped vehicles. As all CV-equipped vehicles travel within DSRC range of a Transit Vehicle OBU, the BSM is captured by the Transit Vehicle OBU and captured as part of a Transit Vehicle Interaction Event.
- SPaT messages are received by the Transit Vehicle OBU from the RSU. To conserve the amount of memory required to store SPaT Messages, only messages where the MsgCount data element resets to 0 are recorded by the Transit Vehicle OBU – this indicates a SPaT message where the message content has changed from the prior SPaT message sent.
- SRMs are produced by Transit Vehicle OBUs. They are recorded as they are broadcast.
- SSMs are received by the Transit Vehicle OBU from the RSU. They are recorded as they are received.
- RSMs are broadcast from select RSUs when corresponding school zone signals are flashing. Each RSM that is broadcast from the RSU is recorded by the Transit Vehicle OBU
- MAP Messages are broadcast from RSUs. Each MAP that is broadcast from the RSU is recorded by the Transit Vehicle OBU. Only the most recent MAP message is saved and associated with any event.

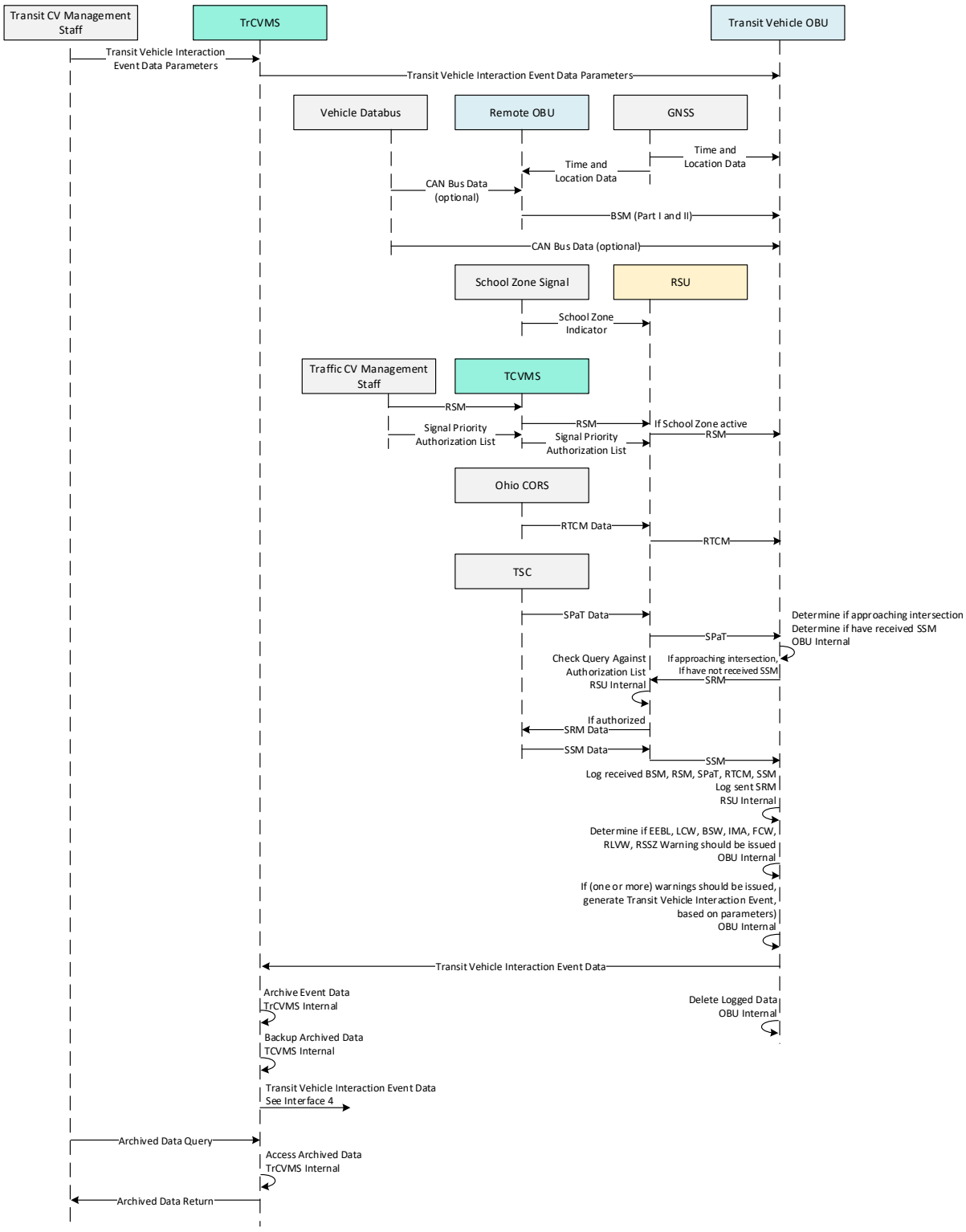

Source: City of Columbus

Figure 27: Transit Vehicle Interaction Event Recording Sequence Diagram

4.6. CONNECTED VEHICLE MESSAGES

4.6.1. Basic Safety Message

The BSM is broadcast via DSRC from all OBUs at a rate of 10 Hz (unless congestion control algorithms specify a lower rate, see SAE J2945/1), and primarily support all V2V applications (FCW, EEBL, IMA, BSW/LCW). Data in the BSM Part I is populated using data from internal OBU sensors, or obtained from the vehicle databus and/or GNSS. All data elements in the BSM Part I are required to be populated. However, some elements do not require a particular state to be known. For example, the *Speed* and the *Transmission State* data elements have values that can be populated to indicate that the value is unknown (8191 for *Speed* and 7 for *Transmission State*). However, with respect to the CVE, it is the intent for the BSM PART I to contain data sufficient to enable all specified V2V Safety applications, discussed in other subsections of this chapter. Table 4 below specifies each data element of the BSM Part I, the component(s) which are capable of populating the given data element, and whether or not the data element can be listed as unavailable based on SAE J2735 and specifically for the CVE. Data is made available to the OBU through three different methods

- Internal – The OBU may be equipped with internal sensors that are used to detect attributes of the vehicle's motion that are used in the BSM.
- GNSS – GNSS connectivity provides location and motion information about the vehicle. Latitude, Longitude, elevation, heading, and speed are all made available through GNSS.
- Vehicle Databus – The vehicle databus can be used to populate the BSM using data that originates from the existing vehicle system.

The table below also specifies the expected source of the data that populates each data element in the BSM.

Table 4: BSM Part I Data Element Population

Element	Internal	GNSS	Vehicle Databus	Unknown/ Unavailable Permitted J2735	Unknown/ Unavailable Permitted CVE
msgCnt	X	-	-	No	No
ID	X	-	-	No	No
secMark	X	-	-	No	No
Lat	-	X	-	No	No
Long	-	X	-	No	No
Elev	-	X	-	Yes	No*
semiMajor	-	X	-	Yes	No*
semiMinor	-	X	-	Yes	No*
orientation	-	X	-	Yes	No
transmission	-	-	X	Yes	Yes
speed	-	X	X	Yes	No*
heading	-	X		Yes	No*
angle	-	-	X	Yes	Yes

Element	Internal	GNSS	Vehicle Databus	Unknown/ Unavailable Permitted J2735	Unknown/ Unavailable Permitted CVE
long	X	-	X	Yes	Yes
lat	X	-	X	Yes	Yes
vert	X	-	X	Yes	Yes
yaw	X	-	X	No – set to 0 when unknown	No
wheelBrakes	-	-	X	Yes	Yes
traction	-	-	X	Yes	Yes
abs	-	-	X	Yes	Yes
scs	-	-	X	Yes	Yes
brakeBoost	X	-	X	Yes	No*
auxBrakes	-	-	X	Yes	Yes
width	X**	-	-	Yes	No*
length	X**	-	-	Yes	No*

*Values must be specified under Normal Operating Conditions. Values may be set to unknown only under degraded/failure operating conditions, when the system is not functioning as intended or information is unavailable.

**Configured during OBU installation

Source: City of Columbus

In addition to broadcasting the BSM Part I, multi-unit HDV OBUs (e.g. semi-trucks) broadcast the BSM Part II, which conveys additional information about a trailer (referred to as a 'unit' in the table below) pulled by the hauling vehicle (information indicated in BSM Part I). Because the trailer rotates around a pivot point, its motion is slightly different than that of the hauling vehicle, especially around turns.

Table 5: BSM Part II Data Element Population

Element	Description
sspRights	
pivotOffset*	Given the known length of an object, the magnitude and sign of the pivotOffset projects the point of true connection/rotation along the object's centerline. Measures from the edge of the length of this unit. The pivot offset projects the point of connection/rotation along the object's centerline, from the front edge of the unit. A negative value indicates the pivot point is inside of the unit, while a positive value indicates that the pivot point is outside of the unit.
pivotAngle	Angle between the enter-line of this unit and the unit ahead which is pulling it. This is the only dynamic value.
Pivots*	True, if this unit can rotate about the pivot connection point.
isDolley*	If False, this is a trailer
width*	Width of the trailer, in centimeters
length*	Length of the trailer, in centimeters
x*	Current x offset of the trailer relative to the hauling vehicle
y*	Current y offset of the trailer relative to the hauling vehicle

**Configured during OBU installation*

Source: City of Columbus

4.6.2. Signal Phase and Timing

Broadcast from RSU at a rate of 10 Hz. Modern traffic signal control firmware has been shown to be capable of producing the SPaT payload. The traffic signal controllers along the CVE corridors will need to be running on a firmware version that has this capability. The RSU (or other entity containing the processing unit) receives the SPaT payload from the traffic signal controller, wraps it with the appropriate header, footer, and security certificate information, and broadcasts the final SPaT message from the local RSU.

The SPaT message contains a list of MovementStates which specifies each SignalGroupID along with the MovementPhaseState and TimeChangeDetails.

Table 6: MovementPhaseState Values

Value	Description	Note
1. Unavailable	State is unknown or error	-
2. Dark	Signal head is dark	Not In CVE
3. Stop then Proceed	Flashing Red	Not In CVE
4. Stop and Remain	Solid Red	Right-on-red permission indicated in MAP message
5. Pre Movement	Pre-Green, Red + Yellow	Not In CVE
6. Permissive Movement Allowed	Permissive Green	-
7. Protected Movement Allowed	Protected Green	U-Turns allowed are indicated in MAP message
8. Permissive Clearance	Permissive Yellow	-
9. Protected Clearance	Protected Yellow	-
10. Caution Conflicting Traffic	Flashing Yellow	Not In CVE

Source: City of Columbus

TimeChangeDetails contain the following data elements that provide information regarding when the current phase will change to the next state. Thus, it is important to understand typical signal state progressions that are used at intersection in the CVE. The following table indicates the typical signal state progressions used in the CVE.

Figure 28: TimeChangeDetails Data Elements

Data Element	CVE Required/Optional	Description and Use
startTime	Optional	Time when the phase first started
minEndTime	Required	Expected shortest end time
maxEndTime	Required	Expected longest end time
likelyTime	Required	Best predicted value based on other data
Confidence	Optional	Confidence level of the likelyTime
nextTime	Optional	Rough estimate of when this phase will occur again

Source: City of Columbus

4.6.3. MapData Message

MAP messages are broadcast by RSUs, and for the CVE, they are primarily used by vehicle OBUs for the RLVW and TSP applications.

Its primary use is to convey intersection lane geometry. The contents of this message involve defining the details of indexing systems that are in turn used by other messages to relate additional information (for example, the signal phase and timing via the SPAT message) to events at specific geographic locations on the roadway.

MAP message payloads are generated and input to the CVE by the Traffic CV Management Staff. A process for generating MAP messages has been devised – this process has been captured in detail in the MAP Message Generation Process document (see **Appendix E**), but the main steps are provided in the bulleted list below:

- Specify lane attributes for each lane object geometry in GIS. Lane geometry and attributes match the data elements required by the SAE J2735 standard.
- Export data points and attributes from GIS (likely a database file or comma-separated values)
- Copy the GIS export into the proper cells in the spreadsheet-based tool. Note: ideally, the GIS output can be generated in a format that is consistent with the format expected in the spreadsheet-based tool.
- Input high-level intersection data required for the MAP message into the spreadsheet-based tool, such as: Intersection ID, Intersection Name (readable), Intersection Centerpoint Coordinates, Master Lane Width, and Message Revision Number
- Code in the spreadsheet-based tool is executed to produce the ISD intermediate file format.
- Load intermediate file into ISD
- Verify correct data entry in ISD and made any necessary adjustments
- Produce ASN.1 and UPER Hex encoded MAP message. Manage using Helix

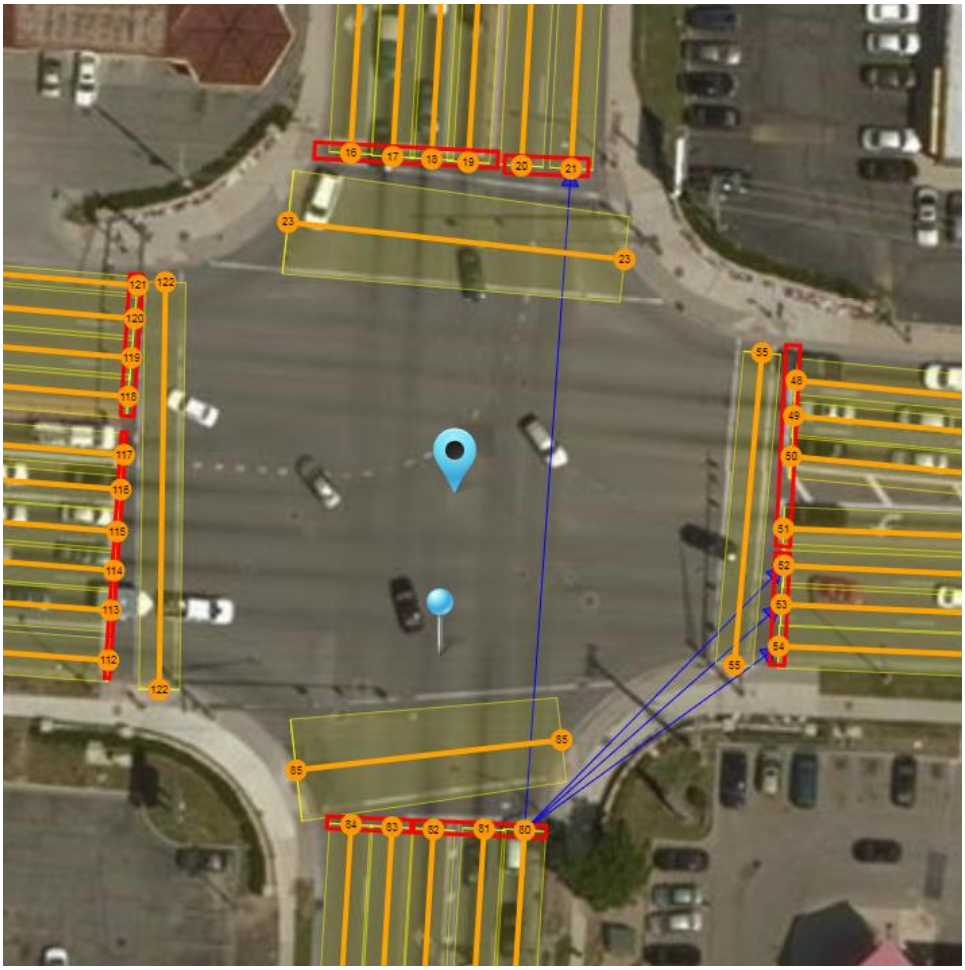

- *Numbers at the end of each lane indicate lane number*
- *Red boxes indicate ingress and egress approach groups*
- *Yellow lines indicate each lane approach centerline*
- *Blue lines indicate allowable connections from an ingress to an egress lane. Each connection has attributes that indicates if certain movements are allowed, such as right turn on red, and U-turn*

Figure 29: MapData Message Visual Representation

Source: City of Columbus

Traffic CV Management Staff input the MAP message payload as well as specify the RSU which the MAP message should be broadcast from. The RSU (or other entity containing the processing unit) receives the MAP message payload from the TCVMS, stores it locally, wraps it with the appropriate header, footer, and security certificate information, and broadcasts the final MAP message from the local RSU via DSRC at a rate of 1Hz.

Most MAP messages remain constant – that is the configuration of all lanes remains constant from day to day. However, there are several intersections where prohibited maneuvers are specified on a recurring basis (i.e. time of day and day of week) or are situation-based (i.e. 'no turn on red' specified when a specific protected left turn/U-turn phase is active). Because the prohibited maneuvers are captured in the MAP

message, the MAP message that is broadcast will have to be modified to account for changes in prohibited maneuvers. A list of intersections where prohibited maneuvers are not constant are provided below:

- Morse Road and Malin St: Variable “No Turn on Red” sign for vehicles approaching from north and south approach on Malin St.
- Morse Road and Northtowne Blvd/Walford St: Variable “No Turn on Red” sign for vehicles approaching from north approach on Walford St and south approach on Northtowne Blvd.
- Morse Road and Heaton Rd.: Variable “No Turn on Red” sign for vehicles approaching from north and south approach on Heaton Rd.
- Morse Road and Tamarak Blvd: Variable “No Turn on Red” sign for vehicles approaching from north and south approach on Tamarak Blvd.
- Morse Road and Northland Ridge Blvd: Variable “No Turn on Red” sign for vehicles approaching from north and south approach on Northland Ridge Blvd.
- Morse Road and McFadden Rd: Variable “No Turn on Red” sign for vehicles approaching from north and south approach on McFadden Rd.
- Morse Road and Maize Rd: Variable “No Turn on Red” sign for vehicles approaching from north and south approach on Maize Rd.
- Morse Road and Sandy Lane Rd: Variable “No Turn on Red” sign for vehicles approaching from north and south approach on Sandy Lane Rd.
- Morse Road and Evanswood Dr: Variable “No Turn on Red” sign for vehicles approaching from north approach on Evanswood Dr.
- Cleveland Ave at Second Ave: No Left Turns 4PM-6PM except buses for vehicles approaching from south (NB) approach on Cleveland Ave.
- Cleveland Ave at Twenty-Fourth Ave: No Turn on Red MON-FRI 8AM-4PM for vehicles approaching from south (NB) approach on Cleveland Ave. and vehicles approaching from east and west approach on Twenty-Fourth Ave.
- Cleveland Ave. at Hudson Ave: No Turn on Red MON-FRI 8AM-4PM for vehicles approaching from north (SB) approach on Cleveland Ave. and vehicles approaching from west (EB) approach on Hudson Ave.
- Cleveland Ave. and Weber Rd.: No Turn on Red MON-FRI 8AM-4PM for vehicles approaching from south (NB) approach on Cleveland Ave.

Static Movement Restriction
(Cleveland Avenue at 24th Avenue)

Dynamic Movement Restriction
(Morse Road at Tamarack Boulevard)

Figure 30: Movement Restriction Types at Connected Vehicle Enviroment Intersections

Source: City of Columbus

4.6.4. Radio Technical Commission for Maritime Services Corrections (RTCM) Message

RTCM messages are broadcast by RSUs, and for the CVE, they allow vehicle OBUs to better position the vehicle in relation to various geometric areas defined in the MAP and RSM messages. Note that the OBUs deployed by the OBU Integrator will also receive position corrections data via satellite to support its operations. A Continuously Operating Reference Stations (CORS) will be locally deployed specifically for supporting the CVE. The CORS could be deployed at the City TMC, due to its location in the vicinity of the CVE and will provide RTCM data over the internet that specify corrections that should be made to improve local positioning. This RTCM data will be made available to the RSU from the CORS via the internet.

The RSU (or other entity containing the processing unit) receives the RTCM payload from the CORS, wraps it with the appropriate header, footer, and security certificate information. Message type 1005 Antenna Reference Point (ARP) coordinates is broadcast at 2 Hz, and Message type 1001 GPS L1 observations is broadcast at 5 Hz.

4.6.5. Roadside Safety Message

RSMs are broadcast by RSUs, and for the CVE are primarily used to support the RSSZ application. In the context of the CVE, the RSM defines the geometry of a school zone and the school zone approaches. Furthermore, it defines the times when the zone is active as well as the school zone speed limit. Traffic CV Management Staff input the RSM message data as well as specify the RSU which the RSM message should be broadcast from. The specified RSU (or other entity containing the processing unit) receives the RSM payload from the TCVMS, stores it locally, and wraps it with the appropriate header, footer, and security certificate information. The RSU, capable of determining the status of a local school zone signals, determines if the signal is active (flashing). While the RSU detects that the school zone signal is active, it broadcasts the RSM via DSRC at a rate of 1Hz (must be configurable, between 0.2Hz and 10Hz).

4.6.6. Signal Request Message

The SRM is broadcast from Transit Vehicle OBUs, Emergency Vehicle OBUs, and HDV OBUs and is primarily used to support traffic signal priority/preemption applications. The SRM contains a request for priority (transit, HDV) or preemption (emergency) at a specified intersection for a specified movement.

Because it will be of interest to limit priority and preemption authorizations (see Appendix D), it will be important for on OBU to specify the approach, lane, and connection of the phase that it intends to request priority for. The RSU will not authorize priority for requests from OBUs that are not specified to receive priority for the requested movement. The required content in the SRM is provided in Table 7.

Table 7: Signal Request Message (SRM) Content

Data Element	Description
DSecond	Represents milliseconds within a minute
TemporaryID	Random identifier used to identify the local vehicles that are interacting during an encounter.
LaneConnectionID	Unique index of the connection maneuver through the intersection that the vehicle is requesting priority of preemption for.
ApproachID	Unique index of the approach that the vehicle will approach the intersection on.
LaneID	Unique index of the lane that the vehicle will approach the intersection in.
PriorityRequestType	Indicates if a request represents a new request, a request update, or a request cancellation.
RequestID	Used to provide a random unique ID between two parties for various dialogue exchanges.
IntersectionID	Unique index to the intersection for which priority or preemption is being requested at. This value is found in the MAP message for the specified intersection.

Data Element	Description
Service Specific Permissions (SSP) Index	SSP contents in the Certificate (used to sign the message) specify the type of strategy (priority, preempt, other) requested in the SRM. SSPIndex values range from 0-31 (5 bits) and are locally defined. With respect to the SRM, the SSPIndex values are defined as follows: 0: Transit Vehicles. TSP enabled though CVE will be deployed alongside an existing TSP system. The existing system will continue to operate – the CV-based TSP will not affect signal operations even when a request is authorized. 1: Emergency Vehicles. This strategy allows the requesting vehicle to receive signal preemption. One of two strategies will be implemented: a. All phases transition to an all-red phase for a pre-determined amount of time. b. all phases transition to an all-red phase except for all ingress lanes on the emergency vehicle's approach, which transition to green to allow traffic to 'flush' away from the queuing area before the emergency vehicle arrives to facilitate mobility. 2: HDVs. This strategy allows the requesting vehicle to receive signal priority. The purpose of signal priority for HDVs is reduction of emissions – the most benefit will be noticed when an HDV is prevented from decelerating (and subsequently accelerating) – and thus only green extensions are provided for the HDV approach. Vehicles listed above will be provided certificates to sign the SRM with the specified SSP indices. This eliminates the likelihood of other users (not authorized to receive priority) from being able to successfully receive the type of certificate necessary to request priority or preemption. The roadside receiver uses the SSP index to determine the type of strategy to implement, if it determined the requesting entity is eligible.

Source: City of Columbus

Elements such as DSecond are populated based on the internal clock of the OBU, while the Temporary ID and Request ID are random integer values generated by the OBU.

The OBU uses information about the vehicle's location and heading (from GNSS) and compares it to the lane geometry information form the MAP message to determine the ApproachID associated with the approach the vehicle is approaching the intersection from. This approach ID is used to populate the Approach ID field.

Similarly, the LaneID and LaneConnectionID are populated based on information about the vehicle's location. However, it is ideal for the OBU to request only a particular movement through the intersection to minimize disruptions to traffic flow – requests will only be granted for certain movements for each vehicle according to the movements it is expected to make through the intersection. Signal priority and preemption strategies are explained in Appendix D. Both transit vehicles and HDVs have pre-established routes which ultimately limit the movements they will make through each intersection. Thus, as a transit vehicle or HDV approaches an intersection, it should know, based on its location and heading, which LaneID and LaneConnectionID should be specified in the SRM.

4.6.7. Signal Status Message

The SSM is broadcast from RSUs to support traffic signal priority/preemption applications. The SSM provides an indication of all requests that have been made and the order in which they are being served and is populated using data made available from the traffic signal controller. It is only broadcast via DSRC when one or more requests are pending or when a request has been denied. The emergency vehicle OBU (having recently made a request for preemption) uses the SSM to determine if preemption has been granted

and provides an indication that preemption has been granted to the emergency vehicle operator. All other vehicles to not utilize data in the SSM.

Data streaming from the traffic signal controller is used to populate the SSM (see **Table 8**).

Table 8: Signal Status Message

Data Element	Description
DSecond	Represents milliseconds within a minute
MsgCount	Changes when message contents change
RequestID	Index of the RequestID provided in the SRM
IntersectionID	A unique mapping to the intersection in question
LaneID	The index of the lane for which priority/preemption is needed
ApproachID	The index of the approach for which priority/preemption is needed
LaneConnectionID	The index of the connection for which priority/preemption is needed
PrioritizationResponseStatus	Indicates the general status of a prior prioritization request

Source: City of Columbus

Table 9: PrioritizationResponseStatus Enumeration

Value	Status	Description
0	Unknown	-
1	Requested	Priority/Preemption request was detected by the traffic controller
2	Processing	Checking request, request is in queue
3	watchOtherTraffic	Cannot give full permission, watch for other traffic.
4	Granted	Priority/Preemption is active
5	Rejected	Priority/Preemption was rejected
6	maxPresence	Request has exceeded the maxPresence time
7	reserviceLocked	Controller requires the passage of time before another similar request will be accepted

Source: City of Columbus

4.6.8. Wave Service Announcement

Available services and messages are advertised by way of sending periodic messages known as WAVE Service Advertisements (WSA). Each WSA may include a list of PSIDs for services that are available on the network, as well as information needed to receive and process the WSMs pertaining to each service being advertised. Each allocated PSID value is associated with a WAVE service. Table 10 below provides the PSID channel map, which indicates the types of messages and services that are provided over each channel in the DSRC spectrum. Service Channels 174, 176, 180, 182, and 184 are assigned to various RSUs in the same vicinity, based on the Service Channel Plan, to maximize the number of vehicles that can utilize the system simultaneously.

Table 10: Channel Map for DSRC Messages

Channel	Message	Description
172	BSM, MAP, SPAT	Continuous Mode – Safety Channel
174	SRM, SSM, SCMS,OTA Updates	Other V2I Services. Assigned to specific RSUs based on the DSRC Service Channel Plan
176	SRM, SSM, SCMS,OTA Updates	Other V2I Services. Assigned to specific RSUs based on the DSRC Service Channel Plan
178	WSA, RSA, RTCM	Advertisement for other V2x Services
180	SRM, SSM, SCMS,OTA Updates	Other V2I Services. Assigned to specific RSUs based on the DSRC Service Channel Plan
182	SRM, SSM, SCMS,OTA Updates	Other V2I Services. Assigned to specific RSUs based on the DSRC Service Channel Plan
184	SRM, SSM, SCMS,OTA Updates	Other V2I Services. Assigned to specific RSUs based on the DSRC Service Channel Plan

Source: City of Columbus

Chapter 5. Design Rationale

The system design is predominately based on requirements and system interfaces that were developed previously in the project. Content in previous project documents were developed with the primary scope of the CVE in mind. That is, to realize the benefits of deploying CV technology into an operational environment, and the deployment of applications that have demonstrated sufficient levels of development and testing. The ability of the CVE to address the needs of users and subsequent requirements (captured in the ConOps and System Requirements Specification, respectively) depends on the availability of hardware and software solutions that have been previously deployed (and subsequently improved upon). There is an expectation to maximize the implementation of commercial off-the-shelf hardware and software to meet the needs of users and stakeholders. As noted in the ConOps, driver-focused safety and mobility applications which have met technology readiness level 6 were selected for inclusion. Applications that serve the needs of local management agencies (Vehicle Data for Traffic Operations, Transit Vehicle Interaction Event Recording), despite limited development, will be implemented as these applications primarily involve the transfer of data – which is expected to require minimal amount of development to operate effectively in a deployment environment. It has been previously decided that DSRC will be deployed as the wireless interface to enable these applications.

The system design that is presented in this document is unique in that it is being performed during the procurement process for the CVE. Thus, the rationale for the development of design will be based, in part, on the ability of the selected offerors to meet the specifications that are developed. In March 2019, the City of Columbus issued two requests for proposals (RFP) to implement the CVE. The CVE was divided into two systems (RSU-based system and an OBU-based system). The RFPs indicated a need to procure two systems integrators:

- The OBU vendor is responsible for the identification and procurement, development, configuration, installation, testing, maintenance, and in the case of private vehicles, possible removal, of the in-vehicle components that comprise the CVE
- The RSU vendor is responsible for the identification and procurement, provision, management, operation and maintenance of the network of nearly 100 dedicated short-range communications (DSRC)-based roadside units (RSUs) that comprise the CVE.

As part of the RFP response, each vendor was asked to indicate their ability to adhere to each system requirement that was presented. These responses provided a lot of detail on which requirements could be satisfied with the current state of technology. While vendors were able to meet a large number of requirements with little or no modification to existing capabilities, all vendors indicated that there were some requirements that could not be met (not without major modifications). The OBU and RSU integrators that were ultimately selected have demonstrated that they are the most effective team at meeting requirements and successfully developing and integrating their respective parts of the system. There may be instances in the system design that may deviate from the system requirements that are based on responses that were received from the selected vendors (changes to the system requirements document based on integrator feedback will be reflected in the system requirements update).

The selected OBU and RSU system integrators are expected to work closely with the each other, their respective equipment vendors (if different that the offeror), and the Management Team to ensure a successful deployment of the CVE. All devices that are deployed are expected to be interoperable and should adhere to the standards that have been identified. All deployed devices are expected to be OmniAir Certified at the time of deployment. Hardware vendors and integrators may need to make modifications to ensure that standards are being interpreted in the same manner so that interoperability can be achieved.

Testing will be especially important in instances where multiple vendors are involved so that progress (interoperability and adherence to requirements and design) can be assessed and verified throughout the pre-deployment collaboration process. To improve the likelihood of successful deployment, evidence of successful interoperability testing will be expected to be provided (along with any relevant demonstrations) from vendors prior to deployment.

Finally, the Department of Technology (DoT) play a significant role in the management and design of the Columbus Traffic Signal System (CTSS), the fiber-optic network backhaul that will be leveraged to support V2I applications and CVE system management activities. Thus, the DoT plays an important role in the design of the network – the project team has coordinated with DoT to establish the CVE network design, and to ensure that it meets the DoT's network security protocols.

Appendix A. Acronyms and Definitions

Table 11: Acronym List

Abbreviation/Acronym	Definition
APPS	CV Applications
BSM	Basic Safety Message
BSW	Blind Spot Warning Application
CCTN	Columbus Connected Transportation Network
CEAV	Connected Electric Automated Vehicle (Smart Columbus Project #8)
CFR	Code of Federal Regulations
ConOps	Concept of Operations
CORS	Continuously Operating Reference Station
COTA	Central Ohio Transit Authority
CTSS	Columbus Traffic Signal System
CV	Connected Vehicle
CVCP	Connected Vehicle Co-Processor
CVE	Connected Vehicle Environment (Smart Columbus Project #2)
CVRIA	Connected Vehicle Reference Implementation Architecture
DOT	(City of Columbus) Department of Technology
DPS	Columbus Department of Public Service
DSRC	Dedicated Short Range Communications
EEBL	Emergency Electronic Brake Light Application
EOS	Econolite Operating System
EVP	Emergency Vehicle Preemption Application
FCW	Forward Collision Warning Application
FSP	Freight Signal Priority
GNSS	Global Navigation Satellite System
ICD	Interface Control Document
IEEE	Institute of Electrical and Electronics Engineers
IMA	Intersection Movement Assist Application
IP	Internet Protocol Address
ISO	International Organization for Standardization
ITS	Intelligent Transportation Systems

Abbreviation/Acronym	Definition
LCW	Lane Change Warning Application
LED	Light-Emitting Diode
LTE	Long-Term Evolution
LTS	Location and Time Service
MAP	MapData Message
MMITSS	Multimodal Intelligent Traffic Signal System
NEMA	National Electrical Manufacturers Association
NIST	National Institute of Standards and Technology
OBE	Onboard Equipment (many or all onboard devices)
OBU	Onboard Unit (one onboard device)
ODOT	Ohio Department of Transportation
OID	Object Identifier
Operating System	Operating System (Smart Columbus Project #1)
OTA	Over-the-Air
PII	Personally Identifiable Information
RLVW	Red Light Violation Warning Application
RSE	Roadside Equipment
RSM	Roadside Safety Message
RSSZ	Reduced Speed School Zone Application
RSU	Roadside Unit
RTCM	Radio Technical Commission for Maritime Services Corrections Message
SAE	Society of Automotive Engineers
SC	Smart Columbus
SCC	Smart City Challenge
SCMS	Security Credential Management System
SDD	System Design Document
SE	Systems Engineering
SET-IT	Systems Engineering Tool for Intelligent Transportation
SNMP	Simple Network Management Protocol
SPaT	Signal Phase and Timing
SRM	Signal Request Message
SSM	Signal Status Message
SyRS	System Requirements Specification
TCVMS	Traffic CV Management System

Abbreviation/Acronym	Definition
TMC	Traffic Management Center
TrCVMS	Transit CV Management System
TrMC	Transit Management Center
TSC	Traffic Signal Controller
TSP	Traffic Signal Priority Applications
TVIER	Transit Vehicle Interaction Event Recording
USDOT	United States Department of Transportation
V2I	Vehicle-to-Infrastructure
V2V	Vehicle-to-Vehicle
VDTO	Vehicle Data for Traffic Operations

Source: City of Columbus

Appendix B. Glossary

Table 12: Glossary

Term	Definition
APPS	Represents the functional group of CV Apps to be deployed
GNSS	Global Navigation Satellite System used for OBU positioning. GPS is an example of a GNSS
BSW/LCW	Blind Spot Warning/Lane Change Warning CV App
CORS	Continuously Operating Reference System serves as a source of GNSS positioning correction information
CV Pilot	USDOT-sponsored CV deployments in Wyoming, Tampa, and New York City.
EVP	Emergency Vehicle Preempt CV App
EEBL	Emergency Electronic Brake Light CV App
FCW	Forward Collision Warning CV App
FSP	Freight Signal Priority CV App
IMA	Intersection Movement Assist CV App
ITP	Intent to Platoon Signal Priority CV App
MAP	J2735 Message used to convey roadway geometry and movements to OBU
MHP	Message Handler/Processor serves to route messages between RSU and other infrastructure devices. Optional
MSG	Represents the J2735 and J2945 messages that used as part of the CVE
RLVW	Red Light Violation Warning CV App
RSM	Roadside Safety Message – CAMP–driven message expected to be part of J2945
RSSZ	Reduced Speed School Zone CV App
TMC	Traffic Management Center is location that house system to monitor operations of network of signal controllers and will include RSUs
TrMC	Transit Management Center is location where transit fleet is managed, including data capture form onboard systems, to include CVE
TSC	Traffic Signal Controller – source of SPaT data
TSP	Transit Signal Priority CV App
TVIER	Monitor Transit Vehicle Interactions CV App
VDTO	Vehicle Data for Traffic Operations CV App

Source: City of Columbus

Appendix C. Requirements Traceability Matrix

Section	Title	Functional Group	Sub-Component	Requirement Number
4.1.1.1	Mounting	Roadside Equipment	Roadside Unit	MT1364, PY3221, PY3222, PY3224, PY3246, PY3249, PY3251
4.1.1.2	Power	Roadside Equipment	Roadside Unit	IF1348, IF1349, AR3121, AR3122, PY3223, PY3245, PY3250
4.1.1.3	Connections	Roadside Equipment	Roadside Unit	IF1350, IF1351, IF1352, IF1361, IF1362, IF1363, PY1372, FN3240, PY3248,
4.1.1.4	Antenna	Roadside Equipment	Roadside Unit	PY1370, PY1371, SR3123, SR3124, SR3125, PY3234, PY3235,
4.1.2.1	Device Configuration	Roadside Equipment	Roadside Unit	FN1318, FN1321, FN1325, FN1328, FN1333, SR1373, RG1605, RG1606, FN3010, PR3226, PR3230, FN3233, MT3239, FN3241, FN3242
4.1.2.2	Certificate Top-Off	Roadside Equipment	Roadside Unit	FN1319, FN1327, FN1335, IF1344, IF1353, IF1354, SR3131, SR3231, PR3232,
4.1.2.3	Remote Updates	Roadside Equipment	Roadside Unit	FN3111, FN3112, FN3228,
4.1.2.4	Misbehavior Detection	Roadside Equipment	Roadside Unit	
4.1.2.5	Location Services and Time Synchronization	Roadside Equipment	Roadside Unit	FN1308, IF1343, PR1365, PR1366, PR1367, PR1368, PR1369, PR3237
4.1.2.6	Event Logging	Roadside Equipment	Roadside Unit	FN1311,

Section	Title	Functional Group	Sub-Component	Requirement Number
4.1.2.7	Built-In Self-Test	Roadside Equipment	Roadside Unit	PR3243, PR3244,
4.1.2.8	Message Forwarding	Roadside Equipment	Roadside Unit	FN1310, FN1312, FN1317, IF1341, IF1342, IF1345, IF1356, IF1357, FN2972, FN2973, FN2974, FN2975, IF2978, FN2979, FN2980, FN2981, FN2982, FN2983, FN2987, FN2988, FN2989, PR2994, FN3109, PR3229, FN3238,
4.1.3	System Monitoring	Roadside Equipment	Roadside Unit	FN1322, SR3127, RE3128, PY3225,
4.1.4.1	Position Correction	Roadside Equipment	Roadside Unit	FN1113, FN1313, IF1339, IF1358, FN3236
4.1.4.2	Signal Request Messages	Roadside Equipment	Roadside Unit	IF1347, IF1360, FN2990, FN2991,
4.1.4.3	Signal Status Messages	Roadside Equipment	Roadside Unit	FN1314, IF1340, IF1346, IF1359, FN2976, FN2977, IF2985, IF2986, IF2985, IF2986, FN3000
4.1.5	Service Channel Plan	Roadside Equipment	Roadside Unit	FN3227, IF3247,
4.2.1.1	Mounting	Vehicle Onboard Equipment	Light-Duty Vehicle OBU	FN1203, MT1252, MT1253, PR2907, PR2913, PY3016, PY3018, PY3202, PY3203, PY3206, PY3207, PY3208, PY3209
4.2.1.2	Power	Vehicle Onboard Equipment	General OBU	PY3201
4.2.1.3	Connections	Vehicle Onboard Equipment	General OBU	SR1263, PY3216,
4.2.1.4	Human Machine Interface	Vehicle Onboard Equipment	Light-Duty Vehicle OBU	PR3017, IF3019, PR3020, FN3078, FN3196, PY3215, PY3217, PY3219, PY3220
4.2.1.5	Antenna(ae)	Vehicle Onboard Equipment	General OBU	FN1209, PY3205

Section	Title	Functional Group	Sub-Component	Requirement Number
4.2.1.6	Wiring	Vehicle Onboard Equipment	General OBU	PY3204
4.2.1.7	Sierra Modem	Vehicle Onboard Equipment	Transit Vehicle OBU	FN1555
4.2.2.1	Device Configuration	Vehicle Onboard Equipment	General OBU	FN1184, SR1264, SR1266, SR1267, RG1607, PR3199, PR3200, PY3211, PR3212
		Vehicle Onboard Equipment	Light-Duty Vehicle OBU	FN3021, FN3022, FN3023, FN3024, FN3025,
4.2.2.2	Certificate Top-Off	Vehicle Onboard Equipment	Light-Duty Vehicle OBU	IF1243, SR1261, SR1262, FN2962, FN2963, FN2964
4.2.2.3	Threat Detection	Vehicle Onboard Equipment	General OBU	SR1254, SR1255, SR1256, SR1259, SR1268, SR1269, SR1270, SR1271
4.2.2.4	Threat Arbitrator			
4.2.2.5	Over-the-Air Updates	Vehicle Onboard Equipment	General OBU	FN1212, IF3210
4.2.2.6	Misbehavior Detection	Vehicle Onboard Equipment	General OBU	S1257
4.2.2.7	Location Services and Time Synchronization	Vehicle Onboard Equipment	Light-Duty Vehicle OBU	FN1205, IF1242
		Vehicle Onboard Equipment	Transit Vehicle OBU	FN1208, FN2960
		Vehicle Onboard Equipment	Emergency Vehicle OBU	FN2961
4.2.2.8	Position Correction	Vehicle Onboard Equipment	General OBU	IF1233, IF1234, IF1235, IF1236
4.2.2.9	Event Logging	V2I Mobility	Transit Vehicle Interaction Event Recording	FN1534, FN1536, FN1537, FN1538, FN1540, FN1541, FN1542, FN1543

Section	Title	Functional Group	Sub-Component	Requirement Number
4.2.2.10	Log Offloading	Vehicle Onboard Equipment	Transit Vehicle OBU	FN1206, IF3214
4.2.2.11	Built-In Self-Test	Vehicle Onboard Equipment	General OBU	FN1185, FN1186,
4.2.2.12	Tamper Detection	Vehicle Onboard Equipment	General OBU	SR1265
4.2.2.13	HMI Output	Vehicle Onboard Equipment	Light-Duty Vehicle OBU	FN1107, FN1108, FN1115, FN1116, FN1122, FN1123, FN1124, FN1131, FN1132, FN1138, FN1139, FN1187, FN1188, FN1189, FN1190, FN1191, FN1192, FN1193, FN1194, FN1195, FN1196, FN1197, FN1203, FN1210, FN1213, IF1222, IF1246, FN1286, FN1287, FN1299, FN3011, FN3012, FN3013, FN3014, FN3015, FN3026, FN3196, FN3027, FN3080, FN1298
		Vehicle Onboard Equipment	Emergency Vehicle OBU	IF1247,
		Vehicle Onboard Equipment	General OBU	FN1198
4.3.1	Physical/Mechanical	Roadside Equipment	Roadside Unit	PY2912
4.3.2	Signal Operations			
4.4.1	IP Allocation	Roadside Equipment	Roadside Unit	PY3120, SR3126, SR3129, SR3130
4.4.2	Circuit Type/Speed			
4.5.1	Vehicle-to-Vehicle Safety Applications	V2V Safety	Blind Spot Warning	PR1111. PR1112, FN3074, PR3113
		V2V Safety	Emergency Electronic Brake Light Warning	PR119, PR1120, FN3075, PR3114

Section	Title	Functional Group	Sub-Component	Requirement Number
		V2V Safety	Forward Collision Warning	PR1127, PR1128, FN3073, PR3115,
		V2V Safety	Lane Change Warning	PR1142, PR1143, FN3076, PR3117
		V2V Safety	Intersection Movement Assist	PR1135, PR1136, FN3077, PR3116
		Vehicle Onboard Equipment	Light-Duty Vehicle OBU	IF1218, IF1223, FN2970, FN2971
		Vehicle Onboard Equipment	Heavy-Duty Vehicle OBU	IF1219, FN2968, FN2969
		Vehicle Onboard Equipment	Transit Vehicle OBU	IF1220, IF1224, FN2954, FN2955, FN2956, FN2966, FN2967,
		Vehicle Onboard Equipment	Emergency Vehicle OBU	IF1221, FN2957, FN2958
4.5.2	Red Light Violation Warning	V2I Safety	Red Light Violation Warning	PR1290, PR1291, FN3078, PR3118
		Vehicle Onboard Equipment	Light-Duty Vehicle OBU	IF1225, IF1229, IF1233
		Vehicle Onboard Equipment	Transit Vehicle OBU	IF1227, IF1231, IF1235
4.5.3	Reduced Speed School Zone	Roadside Equipment	Roadside Unit	FN1316
		V2I Safety	Reduced Speed School Zone	FN1300, FN1301, FN1302, PR1306, PR1307, FN3079, PR3119
		Vehicle Onboard Equipment	Light-Duty Vehicle OBU	IF1240
		Vehicle Onboard Equipment	Transit Vehicle OBU	IF1241

Section	Title	Functional Group	Sub-Component	Requirement Number
4.5.4	Traffic Signal Priority/Preemption	V2I Mobility	General Priority/Preemption	DR1477, DR1478, FN1498, FN1499, FN1503, FN1504, FN1505, FN1508, FN1509, FN1510, FN1511, FN1512, FN1513, FN1514, FN1515, FN1516, FN1517, FN1518, FN1519, FN1520, FN1521, FN1524, FN1525, FN3108
		V2I Mobility	Freight Signal Priority	FN1479, FN1480, FN1481, FN1482, FN1483, FN1484, FN1502, PR1527, PR1528
		V2I Mobility	Transit Signal Priority	FN1488, FN1489, FN1490, FN1491, FN1492, FN1501, IF1526, PR1529, PR1530
		V2I Mobility	Emergency Vehicle Preemption	FN1493, FN1497, FN1500, PR1531, PR1532, FN3107, IF1244, IF1245
		Vehicle Onboard Equipment	Heavy-Duty Vehicle OBU	IF1226, IF1230, IF1234, IF1237, IF1249, FN2996
		Vehicle Onboard Equipment	Transit Vehicle OBU	IF1227, IF1231, IF1235, IF1238, IF1250, FN2997
		Vehicle Onboard Equipment	Emergency Vehicle OBU	FN1215, FN1216, IF1228, IF1232, IF1236, IF1239, IF1251, FN1494, FN1495, FN1496, FN2998
4.5.5	Vehicle Data for Traffic Operations	V2I Mobility	Vehicle Data for Traffic Operations	DR1562, FN1563, FN1564, FN1565, FN1566, FN1567, FN1569, FN1570, FN1571, FN1572, FN1573, FN1574, FN1575, FN1576, FN1577, FN1578, FN1579, FN1580, FN1581, FN1582, FN1583, FN1584, FN1585, FN1586, FN1587, FN1588, FN1589, FN1590, FN1591, FN2914, FN2915, FN2916, FN2917, FN2918, FN2919, FN2920

Section	Title	Functional Group	Sub-Component	Requirement Number
4.5.6	Transit Vehicle Interaction Event Recording	V2I Mobility	Transit Vehicle Interaction Event Recording	DR1533, FN1534, FN1535, FN1536, FN1537, FN1538, FN1539, FN1540, FN1541, FN1542, FN1543, FN1544, FN1545, FN1546, FN1547, FN1548, FN1549, FN1550, FN1551, FN1554, FN1555, FN1556, FN1557, FN1558, FN1559, FN1560, IF1561, FN3081, FN3082, FN3083, FN3084, FN3085, FN3086, FN3087
4.6.1	Basic Safety Message	DSRC Messages	Basic Safety Message	PR1105, PR3003, DR3005, DR3006, PR3007, PR3008, PR3009
4.6.2	Signal Phase and Timing	DSRC Messages	Signal Phase and Timing	DR1378, DR1379, DR1380, DR1381, DR1382, DR1383, DR1384, DR1385, DR1386, DR1387, DR1388, DR1389, DR1390, DR1391, DR1392, DR1393, DR1394, DR1395, DR1396, DR1397, DR1398, DR1399, DR1400, DR1401

Section	Title	Functional Group	Sub-Component	Requirement Number
4.6.3	MapData Message	DSRC Messages	MapData Message	DR1144, DR1145, DR1146, DR1147, DR1148, DR1149, DR1150, DR1151, DR1152, DR1153, DR1154, DR1155, DR1156, DR1157, DR1158, DR1159, DR1160, DR1161, DR1162, DR1163, DR1164, DR1165, DR1166, DR1167, DR1168, DR1169, DR1170, DR1171, DR1172, DR1173, DR1174, DR1175, DR1176, DR1177, DR1178, DR1179, DR1180, DR1181, DR1182, PR1183, PR2993
4.6.4	Radio Technical Commission for Maritime Services	DSRC Messages	Radio Technical Commission for Maritime Services Message	DR1374, DR1375
4.6.5	Roadside Safety Message	DSRC Messages	Roadside Safety Message	DR1192, DR1294, DR1296, DR3089, DR3090, DR3091, DR3092, DR3093
4.6.6	Signal Request Message	DSRC Messages	Signal Request Message	DR1402, DR1403, DR1404, DR1405, DR1406, DR1407, DR1408, DR1409, DR1410, DR1411, DR1412, DR1413, DR1414, DR1415, DR1416, DR1417, DR1418, PR2995

Section	Title	Functional Group	Sub-Component	Requirement Number
4.6.7	Signal Status Message	DSRC Messages	Signal Status Message	DR1420, DR1421, DR1422, DR1423, DR1424, DR1425, DR1426, DR1427, DR1428, DR1429, DR1430, DR1431, DR1432, DR1433, DR1434, DR1435, DR1436, PR2999
4.6.8	Wave Service Announcement	Vehicle Onboard Equipment	General OBU	FN3198

Appendix D. Signal Priority and Preemption Strategies

<<<At this time, the City has not specified a particular strategy to implement for executing signal priority or preemption requests. The following text identifies types of strategies that are being considered.>>>

D.1 TYPE OF STRATEGIES

The following bulleted list provides strategies that may be used in the CVE. Note that this list is not final, nor is it all inclusive.

- Early green priority allows time to be taken from a previous phase to provide an early green for the phase of the approaching vehicle. The amount of time taken from the previous phase is a variable that must be carefully considered to allow passage of the requesting vehicle, without adversely impacting traffic being served during the phase that time is taken away from. This strategy is expected to be made available to freight vehicles.
- Extended green priority allows time to be taken from the next phase to provide an extended green for the phase of the approaching vehicle. The amount of time taken from the next phase is a variable that must be carefully considered to allow passage of the requesting vehicle, without adversely impacting traffic being served during the phase that time is taken away from. This strategy is expected to be made available to freight vehicles.
- The all-red strategy changes all signals to a red state as soon as the existing movement has passed its clearance phase. This would require all approaching traffic to come to a stop at the intersection. Vehicles may continue to turn right on red, but as the emergency vehicle approaches the intersections with lights and sirens on, these vehicles should pull over and stop to allow the emergency vehicle to pass. This strategy is not ideal when traffic is heavy, especially on roads where the movement of vehicles is constrained by barriers, as queued traffic will limit efficient movement of the emergency vehicle.
- The flush strategy changes all movements of the approach of the emergency vehicle to a green state as soon as the existing movement has passed its clearance phase. This would flush all vehicles through the intersection, out of any path (left, through, right) that the emergency vehicle may take through the intersection. The benefit of this strategy is that if implemented correctly, would be the most efficient method, but if the emergency vehicle reaches the back of a queue before it has had a chance to clear, then it could result in similar limitation of movement as the all-red strategy.
- The null strategy is only expected to be applicable for transit vehicles along the CMAX route (all other transit vehicles will not be TSP enabled). When authorized, this strategy does not impact signal operations in any way. Recall that the CVE is deployed alongside an existing TSP system. This null strategy expected to allow the responsiveness of the existing system and a CV-based TSP system (where a different strategy is enabled) to be compared.

D.2 EXPECTED MOVEMENTS

To better manage priority and preemption at CVE intersections, it will be advantageous to consider movements that a vehicle is expected to make at a given intersection in determining whether or not it is

granted priority at that intersection. It is assumed that an emergency vehicle requesting preemption does not have an expected movement, and preemption for all movements associated with the emergency vehicle approach will be authorized. Buses and freight vehicles have established routes. Signal priority should only be authorized for movements that those vehicles are expected to make through each intersection. CMAX transit vehicles on Cleveland Avenue are only expected to make through movements along the Cleveland Avenue corridor. Priority for transit vehicles will not be authorized for any other approaches or movements at intersections in the CVE. Freight vehicles travel along the Alum Creek corridor and the Morse Road corridor (east of I-270). Signal priority should only be authorized for freight vehicles for the following movements

- Alum Creek Drive at SR-317
  - Right Turn from SR-317 WB to Alum Creek Drive NB
  - Left Turn from Alum Creek Drive SB to SR-317 EB
- Alum Creek Drive at I-270 EB
  - Through movement for Alum Creek Drive SB
- Alum Creek Drive at I-270 WB
  - Left Turn from I-270 WB to Alum Creek Drive SB
- Morse Road at I-270 SB
  - Left Turn from Morse Road WB to I-270 SB
- Morse Road at I-270 NB
  - Right Turn from I-270 NB to Morse Road EB
  - Through movement for Morse Road WB
- Morse Road at Stygler Road
  - Right Turn from Morse Road EB to Stygler Road SB
  - Left Turn from Stygler Road NB to Morse Road WB
- All other intersections
  - Through movements for Morse Road/Alum Creek Drive

Priority for freight vehicles will not be authorized for any other approaches or movements at intersections in the CVE.

D.3 TIME OF DAY

Different intersections will exhibit different types of demand throughout the course of a day. It may be advantageous to limit priority or preemption to periods of the day were traffic flow will not be adversely impacted. Alternatively, the type of strategy that is authorized for a particular vehicle may vary by time of day. Time of day restrictions may vary from vehicle to vehicle, depending on local needs and preferences.

D.4 APPROACH

Certain strategies may be better suited for different types of approaches It will be important to consider if the type of priority that is granted varies if the vehicle is approaching from a major or minor approach. For transit vehicles, it may be important to consider if there is a near or far-side stop for the movement where priority is being requested. Due to the sometimes-unpredictable nature of bus dwelling times, it may be advantageous to be selective in the strategies that are authorized at intersections with near or far side bus stops.

D.5 TIME BETWEEN SUCCESSIVE REQUESTS

From time to time, it is expected that a requesting vehicle may not be able to pass through the intersection despite having received authorization and the requested strategy being executed. In this case, the requesting vehicle, determining that it has not cleared the intersection, may continue to request priority or preemption, which may disrupt traffic on opposing approaches. To prevent multiple requests from having excessive impacts on normal signal operations, a strategy may be put in place to limit authorizations for a given vehicle (or group of vehicles) in a given time frame. A given amount of time must pass (cool down) before a second priority request will be granted at the same intersection.

Appendix E. Map Message Generation Process

<<<Note: This process is continuously being refined, and while representative, may not reflect the final procedure used to develop MAP Messages>>>

The Smart Columbus Connected Vehicle Environment is preparing to deploy hardware and software along specified corridors in the Columbus region. There are several applications being supported that require the transmission of MAP message, which must be generated in accordance with the system requirements and relevant standards (SAE J2735). Through USDOT research, an online tool has been developed to facilitate the development of MAP messages (ISD Message Creator[4]). The online tool allows a user to specify various lane object geometries and related attributes that are required to populate the message. However, based on input methods, the online tool appears to cater primarily to users that do not already have accurate intersection geometry information readily available. While the tool allows points to manually entered and edited, this proves to be cumbersome and time consuming for the user.

To expedite the generation of MAP messages, a spreadsheet-based tool has been designed to allow collected survey/CAD data to be entered along with other signal data. This tool leverages the offline saving feature associated with the online tool – it processes data input by the user to generate the offline save file that would have normally ben generated by the online tool. This file can be imported into the online tool, which would then be used to encode the message according to existing standards.

The spreadsheet-based tool allows for much more efficient entry of data, especially survey/CAD data that has already been collected. Furthermore, as intersection geometries change, it allows multiple points to be easily adjusted, if needed. The entry of data in the spreadsheet-based tool is more useful for entering data for a large number of intersections and is expected to save time in the generation of MAP messages in future deployments of CV Technology where accurate intersection geometry data is readily available.

One potential drawback: If the user makes changes in the ISD Message Generator, the offline save file cannot be read into the spreadsheet-based tool; however, it is expected that additional code could be developed to allow the save file, as generated by the online tool, to be converted into the spreadsheet-based format. Also, data entry into spreadsheet can only be effectively reviewed by importing into the ISD Message Generator and making manual checks. Any adjustments would have to be made in the spreadsheet tool and again imported to ensure adjustments were correct. Finally, if the offline save file format for the online tool changes, the code would have to be adjusted to conform to the updated output. Depending on the scope of the update, this could result in significant modifications.

The most important part of generating the MAP message is the collection of geolocation information for each lane object from surveys, CAD, and GIS. This includes but is not limited to ordered lane object centerline latitude, longitude, elevation, and lane width data. Franklin County Engineer's Office (FCEO) maintains and is primarily responsible for information regarding intersection geometry.

In addition to lane geometry described above, attribute information will also be collected for each intersection and for each lane object from existing as-built signal plans and intersection design. This data is specified in detail in the next section. Note that methods for defining variables that are unique to the MAP message (i.e. not traditionally found in signal timing plans) will need to be developed. Through collaboration between FCEO and City of Columbus Department of Public Service (DPS), Intersection IDs and descriptive

[4] https://webapp.connectedvcs.com/isd/#

intersection names have been defined (Appendix B: Intersection List), and a method for assigning Lane IDs have been developed (Appendix C: Lane ID Assignment Method).

E.1 USING THE SPREADSHEET-BASED TOOL

This section provides a guide to for entering data into the spreadsheet-based tool. The spreadsheet consists of four tabs (Intersection Information, Lane Properties, Lane Points, and Connection data) and a module that generates the save file (that is imported into the online tool). Subsections are organized by each tab and use of the module. Because of their first-hand knowledge of intersection geometry information, FCEO has been proposed to be primarily responsible for data entry into the spreadsheet-based tool. There are instances where FECO may need to work with DPS to obtain information that is input into the spreadsheet, which are specified in the text below. FCEO will have the full support of DPS and consulting agencies (developer of the spreadsheet-based tool) working on the CVE project throughout the MAP message development process.

E.1.1 Intersection Information

The *Intersection Information* tab contains a few basic information items regarding the intersection that is being mapped.

- **Latitude:** The latitude (WGS 84) of the center of the intersection.
- **Longitude:** The longitude (WGS 84) of the center of the intersection.
- **Elevation:** The elevation (m) of the center point of the intersection.
- **Name:** A human-readable name for the given intersection. The name can be comprised of up to 64 characters and must be comprised of the first 128 characters of the ASCII alphabet. This includes all upper/lowercase characters, including most special characters. For reference, the first 128 ASCII characters are provided in **Figure 35**.
- **Intersection ID:** A locally defined value that is unique to a particular intersection in a given region (Columbus metro). Allowable values are integers in a range from 0 to 65,535. Values 0-255 are reserved for testing purposes. The City of Columbus DPS has defined intersection IDs to be used in the CVE (see).
- **Master Lane Width:** A reference value that other lane widths are compared against in specifying lane geometries. This is explained further in the *Lane Points* tab. The Master Lane Width should be the standard lane width used in the area. Allowable values are integers in a range of 0 to 32,767 centimeters.
- **Revision Number:** Used to keep track of message revisions. Should be changed to a new number when a new MAP message is generated to replace a previously deployed MAP message. Allowable values are integers in a range from 0-127.

After all data has been entered, the user executes the module which will output a file (located in the same folder as the spreadsheet-based tool). This file can be imported into the online tool (File → Open Child Map). A visual inspection of the lane lines is then performed to determine if any geometry data may have been entered incorrectly. Note that lane centerline points may not appear exactly in the center of each lane on the satellite view, as it is known that the satellite view is not necessarily accurately projected; however, it will allow major discrepancies to be noticed. Inspection of the intersection center point and each approach lane is then performed to determine if all other attributes were entered correctly. Any changes should be made in the spreadsheet and reloaded into the tool.

After all data has been confirmed to have been entered correctly, the message can be encoded. This is done by selecting Tools → Encoder, selecting all message options, and selecting "Encode". The "UPER Hex" field will contain the MAP message payload.

Center Latitude	40.0595295
Center Longitude	-82.9530048
Center Elevation (m)	267.2212
Name	Morse Rd & Cleveland Ave
ID	1000
Master Lane Width (cm)	366
revision number	2

Figure 31: Example of Intersection Information Data Entry

Source: City of Columbus

E.1.2 Lane Properties

The *Lane Properties* tab contains several attributes for each approach – one row for each approach (ingress and egress). In each line the user must specify each of the following:

- **Lane Number:** A value unique to each lane approach at the intersection. A locally defined method has been devised for numbering lane approaches (see **Section E.5. Appendix C: Lane ID Assignment Method**). Allowable values are integers in a range from 1 to 254. Lane numbers cannot be used more than once for a given intersection.
- **Lane Type:** Specifies the lane type. One of five types that must be selected: Vehicle, Crosswalk, Bike, Sidewalk, and Parking
- **Descriptive Name:** A human-readable name for the given approach lane. The text can be comprised of up to 64 characters and must be comprised of the first 128 characters of the ASCII alphabet. This includes all upper/lowercase characters, including most special characters. For reference, the first 128 ASCII characters are provided in Save File Generation, Inspection, and Encoding
- **Shared With:** Denotes the presence of other user types (travel modes) who have an equal right to access and use the lane. Used to indicate lanes and/or users that travel along the same path, and not those that simple cross over the lane's segments path (such as a crosswalk). A true/false value (0/1) is provided for each of the following attributes: Overlapping, multiple lanes, other, individual motorized, bus, taxi, pedestrian, cyclist, transit vehicle, pedestrian.
- **Type Attribute:** Relates specific properties found in the lane type specified in the Lane Type column. A true/false value (0/1) is provided for each of the following attributes
    - (Lane Type: Vehicle): vehicle revocable lane, vehicle flyover lane, HOV lane use only, restricted to bus use, restricted to taxi use, restricted from public use, has IR beacon coverage, permission on request.
    - (Lane Type: Crosswalk): crosswalk revocable lane, bicycle use allowed, is crosswalk flyover lane, fixed cycle time, bidirectional cycle times, has push to walk button, audio support, RF signal request present, unsignalized segments present
    - (Lane Type: Bike): bike revocable lane, pedestrian use allowed, is bike flyover lane, fixed cycle time, bidirectional cycle times, isolated by barrier, unsignalized segments present.

- (Lane Type: Sidewalk): sidewalk revocable lane, bicycle use allowed, is sidewalk flyover lane, walk bikes.
- (Lane Type: Barrier): median revocable lane, median, white line hashing, striped lines, double striped lines, traffic cones, construction barrier, traffic channels, low curbs, high curbs.
- (Lane Type: Striping): stripe to connection lanes revocable lane, stripe draw on left, stripe draw on right, stripe to connecting lanes left, stripe to connecting lanes right, stripe to connecting lanes ahead
- (Lane Type: Tracked Vehicle): revocable lane, commuter railroad track, light railroad track, heavy railroad track, other rail type.
- (Lane Type: Parking): parking revocable lane, parallel parking in use, head in parking in use, do no park zone, parking for bus use, parking for taxi use, no public parking use.

- **Lane Attributes:** A true/false value (0/1) that describes all allowed maneuvers at path end: straight, right, U turn, left turn, right turn on red, lane change, no stopping, yield always required, may proceed after stop, caution.

After all data has been entered, the user executes the module which will output a file (located in the same folder as the spreadsheet-based tool). This file can be imported into the online tool (File → Open Child Map). A visual inspection of the lane lines is then performed to determine if any geometry data may have been entered incorrectly. Note that lane centerline points may not appear exactly in the center of each lane on the satellite view, as it is known that the satellite view is not necessarily accurately projected; however, it will allow major discrepancies to be noticed. Inspection of the intersection center point and each approach lane is then performed to determine if all other attributes were entered correctly. Any changes should be made in the spreadsheet and reloaded into the tool.

After all data has been confirmed to have been entered correctly, the message can be encoded. This is done by selecting Tools → Encoder, selecting all message options, and selecting “Encode”. The “UPER Hex” field will contain the MAP message payload.

Lane Number	Lane Type	Descriptive Name	Shared With										Type Attribute								Lane Attributes										
	Menu: Vehicle, Crosswalk, Bike, Sidewalk, Parking		Overlapping	Multiple Lanes	Other	Individual Motorized	Bus	Taxi	Pedestrians	Cyclist	Track Vehicle	Pedestrian	Vehicle Revocable Lane	Vehicle FlyOver Lane	HOV Lane Use Only	Restricted to Bus Use	Restricted to Taxi Use	Restricted from Public Use	Has IR Beacon Coverage	Permission on Request	Maneuver Straight Allowed	Maneuver Left Allowed	Maneuver Right Allowed			Right Turn on Red					
			0	1	2	3	4	5	6	7	8	9	0	1	2	3	4	5	6	7	0	1	2	3	4	5	6	7	8	9	10
1	Vehicle	EB Left 1				1	1	1		1			1									1									
2	Vehicle	EB Left 2				1	1	1		1			1									1									
3	Vehicle	EB Through 1				1	1	1		1			1								1										
4	Vehicle	EB Through 2				1	1	1		1			1								1										

Figure 32: Example of Lane Properties Data Entry

Source: City of Columbus

E.1.3 Lane Points

The *Lane Points* tab contains geometry information for each approach – two or more rows for each lane approach (ingress and egress). Points for each lane approach must be ordered starting from the point nearest the intersection. The following notes apply to defining lane points:

- A maximum of 64 points can be specified for each lane approach. In case of a horizontal curve, enough points should be used so that the centerline (as defined by the points) do not deviate more than specified amount (as defined by standard) from the actual centerline.
- The elevation difference between consecutive points cannot exceed 511 centimeters.
- The difference in lane width between consecutive points cannot exceed 511 centimeters.

For each line in this tab, the user must specify each of the following (see **Figure 33**):

- **Lane Number:** the lane for which the given latitude, longitude, and elevation represents a point on that lane. The lane number should correspond to one of the lane number specified in the *Lane Properties* tab.
- **Order:** represents the order in which the points comprising the lane are connected. The value of 0 should be used for the point closest to the intersection and subsequent points should be incremented by 1 moving away from the intersection.
- **Latitude:** The latitude (WGS 84) of a point along the centerline of a lane approach. Note that if the same coordinate is used to represent points along different lane numbers, then it will be listed multiple times.
- **Longitude:** The longitude (WGS 84) of a point along the centerline of a lane approach. Note that if the same coordinate is used to represent points along different lane numbers, then it will be listed multiple times.
- **(d) Elevation:** Differential elevation. Elevation values for the first point of a line are differential and based on the master elevation specified in the *Intersection Info* tab. The elevation for subsequent points is differential based on the elevation of the previous point. Allowable values are integers in a range of 512 to 511 centimeters.
- **(d) Lane Width:** Lane Width values for the first point of a line are differential and based on the master lane width specified in the *Intersection Info* tab. The lane width for subsequent points are differential based on the lane width of the previous point. Allowable values are integers in a range of 512 to 511 centimeters.

Lane Number	Order	Lat	Lon	Elevation (m)	Width (cm)	
1	0	40.0595606	-82.9533335	267.3	0	267.3035
1	1	40.0596304	-82.9544312	267.81	0	267.8064
1	2	40.0596129	-82.9546266	267.76	0	267.7577
2	0	40.0595342	-82.953337	267.3	0	267.3035
2	1	40.0596129	-82.9546266	267.76	0	267.7577
2	2	40.0596401	-82.9551296	267.59	0	267.587
2	3	40.0596267	-82.9552407	267.5	0	267.5047
3	0	40.0595023	-82.9533405	267.29	0	267.2944
3	1	40.0595718	-82.9544522	267.68	0	267.6784
3	2	40.0596267	-82.9552407	267.5	0	267.5047

Figure 33: Example of Lane Points Data Entry

Source: City of Columbus

E.1.4 Connections

The *Lane Connection* tab contains one row for each connecting movement through an intersection (from one ingress approach lane to one egress approach lane). Not all ingress lanes or egress lanes will not necessarily have a connecting match. A maximum of 16 connections can be specified for each ingress lane approach. In each line, the user must specify each of the following (see **Figure 34**):

- **Remote ID:** This value is only indicated if the connecting 'to' lane is contained within an intersection with a different Intersection ID. See *Intersection ID* in the Intersection Info section above.
- **From Lane:** The ingress Lane ID of the connection.
- **To Lane:** The egress Lane ID of the connection.
- **Signal Group ID:** Index corresponding to phase numbering (specified in the SPaT message) that ultimately links the connection to a signal state. Allowable values are integers in a range of 1 – 254. The value of 255 is used to indicate a "permanent green" signal state, typically for channelized movements. Note: The City of Columbus will assign this value.
- **Connection Attributes:** A true/false value (0/1) that describes the connection: straight, right, U turn, left turn, right turn on red, lane change, no stopping, yield always required, may proceed after stop, caution.

Lane Num	remoteID	fromLane	toLane	signal_id	Maneuver Straight Allowed	Maneuver Left Allowed	Maneuver Right Allowed			Right Turn on Red					
					0	1	2	3	4	5	6	7	8	9	10
1		1	20	4		1									
2		2	19	4		1									
3		3	14	4	1										
4		4	13	4	1										
5		5	12	4	1										
6		6	7	4			1			1					
6		6	8	4			1			1					

Figure 34: Example of Connections Data Entry

Source: City of Columbus

E.2 SAVE FILE GENERATION, INSPECTION, AND ENCODING

After all data has been entered, the user executes the module which will output a file (located in the same folder as the spreadsheet-based tool). This file can be imported into the online tool (File → Open Child Map). A visual inspection of the lane lines is then performed to determine if any geometry data may have been entered incorrectly. Note that lane centerline points may not appear exactly in the center of each lane on the satellite view, as it is known that the satellite view is not necessarily accurately projected; however, it will allow major discrepancies to be noticed. Inspection of the intersection center point and each approach lane is then performed to determine if all other attributes were entered correctly. Any changes should be made in the spreadsheet and reloaded into the tool.

After all data has been confirmed to have been entered correctly, the message can be encoded. This is done by selecting Tools → Encoder, selecting all message options, and selecting "Encode". The "UPER Hex" field will contain the MAP message payload.

E.3 APPENDIX A: ASCII CHARACTER TABLE

The City of Columbus DPS has defined intersection names to be used in the CVE (see **Figure 35**).

Decimal	Hex	Char	Decimal	Hex	Char	Decimal	Hex	Char	Decimal	Hex	Char
0	0	[NULL]	32	20	[SPACE]	64	40	@	96	60	`
1	1	[START OF HEADING]	33	21	!	65	41	A	97	61	a
2	2	[START OF TEXT]	34	22	"	66	42	B	98	62	b
3	3	[END OF TEXT]	35	23	#	67	43	C	99	63	c
4	4	[END OF TRANSMISSION]	36	24	$	68	44	D	100	64	d
5	5	[ENQUIRY]	37	25	%	69	45	E	101	65	e
6	6	[ACKNOWLEDGE]	38	26	&	70	46	F	102	66	f
7	7	[BELL]	39	27	'	71	47	G	103	67	g
8	8	[BACKSPACE]	40	28	(	72	48	H	104	68	h
9	9	[HORIZONTAL TAB]	41	29	)	73	49	I	105	69	i
10	A	[LINE FEED]	42	2A	*	74	4A	J	106	6A	j
11	B	[VERTICAL TAB]	43	2B	+	75	4B	K	107	6B	k
12	C	[FORM FEED]	44	2C	,	76	4C	L	108	6C	l
13	D	[CARRIAGE RETURN]	45	2D	-	77	4D	M	109	6D	m
14	E	[SHIFT OUT]	46	2E	.	78	4E	N	110	6E	n
15	F	[SHIFT IN]	47	2F	/	79	4F	O	111	6F	o
16	10	[DATA LINK ESCAPE]	48	30	0	80	50	P	112	70	p
17	11	[DEVICE CONTROL 1]	49	31	1	81	51	Q	113	71	q
18	12	[DEVICE CONTROL 2]	50	32	2	82	52	R	114	72	r
19	13	[DEVICE CONTROL 3]	51	33	3	83	53	S	115	73	s
20	14	[DEVICE CONTROL 4]	52	34	4	84	54	T	116	74	t
21	15	[NEGATIVE ACKNOWLEDGE]	53	35	5	85	55	U	117	75	u
22	16	[SYNCHRONOUS IDLE]	54	36	6	86	56	V	118	76	v
23	17	[ENG OF TRANS. BLOCK]	55	37	7	87	57	W	119	77	w
24	18	[CANCEL]	56	38	8	88	58	X	120	78	x
25	19	[END OF MEDIUM]	57	39	9	89	59	Y	121	79	y
26	1A	[SUBSTITUTE]	58	3A	:	90	5A	Z	122	7A	z
27	1B	[ESCAPE]	59	3B	;	91	5B	[	123	7B	{
28	1C	[FILE SEPARATOR]	60	3C	<	92	5C	\	124	7C	|
29	1D	[GROUP SEPARATOR]	61	3D	=	93	5D	]	125	7D	}
30	1E	[RECORD SEPARATOR]	62	3E	>	94	5E	^	126	7E	~
31	1F	[UNIT SEPARATOR]	63	3F	?	95	5F	_	127	7F	[DEL]

Figure 35: Appendix A: ASCII Character Table

Source: https://simple.wikipedia.org/wiki/ASCII#/media/File:ASCII-Table-wide.svg

E.4 APPENDIX B: INTERSECTION LIST

Table 13 shows the Intersection IDs and Names DPS has defined.

Table 13: Appendix B: Intersection List

INT #	INTERSECTION NAME	CORRIDOR
3010	INT# 3010: CLEVELAND AVE. AT SECOND AVE.	CLEVELAND AVE.
3012	INT# 3012: CLEVELAND AVE. AT FIFTH AVE.	CLEVELAND AVE.
3013	INT# 3013: CLEVELAND AVE. AT ELEVENTH AVE.	CLEVELAND AVE.
3014	INT# 3014: CLEVELAND AVE. AT WINDSOR AVE.	CLEVELAND AVE.
3015	INT# 3015: CLEVELAND AVE. AT SEVENTEENTH AVE.	CLEVELAND AVE.
3017	INT# 3017: CLEVELAND AVE. AT TWENTIETH AVE.	CLEVELAND AVE.
3018	INT# 3018: CLEVELAND AVE. AT TWENTY-FOURTH AVE.	CLEVELAND AVE.
3019	INT# 3019: CLEVELAND AVE. AT DUXBERRY AVE.	CLEVELAND AVE.

INT #	INTERSECTION NAME	CORRIDOR
3020	INT# 3020: CLEVELAND AVE. AT HUDSON AVE.	CLEVELAND AVE.
3021	INT# 3021: CLEVELAND AVE. AT MRYTLE AVE.	CLEVELAND AVE.
3022	INT# 3022: CLEVELAND AVE. AT GENESSEE AVE.	CLEVELAND AVE.
3023	INT# 3023: ABERDEEN AVE. AT CLEVELAND AVE.	CLEVELAND AVE.
3024	INT# 3024: CLEVELAND AVE. AT WEBER RD.	CLEVELAND AVE.
3092	INT# 3092: MORSE RD. AT STYGLER RD.	MORSE RD.
3093	INT# 3093: L BRANDS DRIVEWAY/ HAP CREMEAN AT MORSE RD.	MORSE RD.
3154	INT# 3154: CLEVELAND AVE. AT OAKLAND PARK AVE.	CLEVELAND AVE.
3159	INT# 3159: CLEVELAND AVE. AT FERRIS RD.	CLEVELAND AVE.
3161	INT# 3161: I-270 SB RAMPS AT MORSE RD.	MORSE RD.
3162	INT# 3162: I-270 NB RAMPS AT MORSE RD.	MORSE RD.
3163	INT# 3163: APPAIN WAY AT MORSE RD.	MORSE RD.
3209	INT# 3209: MORSE RD. AT SUNBURY RD.	MORSE RD.
3228	INT# 3228: MORSE RD. AT STELZER RD.	MORSE RD.
3231	INT# 3231: EASTON LOOP & EASTON SQUARE AT MORSE RD.	MORSE RD.
3237	INT# 3237: MORSE CROSSING AT MORSE RD.	MORSE RD.
3290	INT# 3290: CHESFORD RD. AT MORSE RD.	MORSE RD.
3291	INT# 3291: MORSE RD. AT WESTERVILLE RD.	MORSE RD.
4006	INT# 4006: ARCADIA AVE. AT HIGH ST.	HIGH ST.
4007	INT# 4007: DODRIDGE ST. AT HIGH ST.	HIGH ST.
4009	INT# 4009: HIGH ST. AT OLENTANGY ST.	HIGH ST.
4017	INT# 4017: FIFTH AVE. AT HIGH ST.	HIGH ST.
4018	INT# 4018: HIGH ST. AT SEVENTH AVE./ KING AVE.	HIGH ST.
4019	INT# 4019: HIGH ST. AT TENTH AVE.	HIGH ST.
4020	INT# 4020: CHITTENDEN AVE. AT HIGH ST.	HIGH ST.
4021	INT# 4021: HIGH ST. AT TWELFTH AVE.	HIGH ST.
4022	INT# 4022: FIFTEENTH AVE. AT HIGH ST.	HIGH ST.
4023	INT# 4023: HIGH ST AT SEVENTEENTH AVE.	#N/A
4024	INT# 4024: EIGHTEENTH AVE./ MCDONALD'S AT HIGH ST.	HIGH ST.
4025	INT# 4025: HIGH ST. AT WOODRUFF AVE.	HIGH ST.
4026	INT# 4026: HIGH ST. AT LANE AVE.	HIGH ST.
4027	INT# 4027: HIGH ST. AT NORTHWOOD AVE.	HIGH ST.
4028	INT# 4028: HIGH ST. AT PATTERSON AVE.	HIGH ST.
4029	INT# 4029: HIGH ST. AT HUDSON AVE.	HIGH ST.

INT #	INTERSECTION NAME	CORRIDOR
4032	INT# 4032: HIGH ST. AT KELSO RD.	HIGH ST.
4033	INT# 4033: HIGH ST. AT WEBER RD.	HIGH ST.
4034	INT# 4034: HIGH ST. AT PACEMONT RD.	HIGH ST.
4035	INT# 4035: COMO AVE. AT HIGH ST.	HIGH ST.
4036	INT# 4036: HIGH ST. AT NORTH BROADWAY	HIGH ST.
4037	INT# 4037: HIGH ST. AT OAKLAND PARK AVE.	HIGH ST.
4038	INT# 4038: HIGH ST. AT TORRENCE RD.	HIGH ST.
4040	INT# 4040: ACTON RD./ HOLLENBACK RD. AT HIGH ST.	HIGH ST.
4042	INT# 4042: COOKE RD. AT HIGH ST.	HIGH ST.
4043	INT# 4043: HENDERSON RD. AT HIGH ST.	HIGH ST.
4044	INT# 4044: DOMINION BLVD. AT HIGH ST.	HIGH ST.
4045	INT# 4045: HIGH ST. AT WEISHEIMER RD.	HIGH ST.
4047	INT# 4047: HIGH ST. AT MORSE RD.	MORSE RD.
4072	INT# 4072: HIGH ST. AT THIRTEENTH AVE.	HIGH ST.
4103	INT# 4103: HIGH ST. AT NINTH AVE.	HIGH ST.
4107	INT# 4107: ELEVENTH AVE. AT HIGH ST.	HIGH ST.
3405	INT# 8005: INDIANOLA AVE. AT MORSE RD.	MORSE RD.
3407	INT# 8007: MORSE RD. AT SINCLAIR RD. /I-71 SB	MORSE RD.
3408	INT# 8008: I-71 NB RAMPS AT MORSE RD.	MORSE RD.
3409	INT# 8009: MORSE RD. AT SANDY LANE RD.	MORSE RD.
3410	INT# 8010: MAIZE RD. AT MORSE RD.	MORSE RD.
3411	INT# 8011: McFADDEN RD. AT MORSE RD.	MORSE RD.
3412	INT# 8012: KARL RD. AT MORSE RD.	MORSE RD.
3413	INT# 8013: MORSE RD. AT NORTHLAND RIDGE BLVD.	MORSE RD.
3414	INT# 8014: MORSE RD. AT TAMARACK BLVD.	MORSE RD.
3415	INT# 8015: HEATON RD. AT MORSE RD.	MORSE RD.
3416	INT# 8016: MORSE RD. AT WALFORD ST./NORTHTOWNE BLVD.	MORSE RD.
3417	INT# 8017: MALIN ST. AT MORSE RD.	MORSE RD.
3440	INT# 8040: CLEVELAND AVE. AT MORSE RD.	MORSE RD.
3446	INT# 8046: EVANSWOOD DR. AT MORSE RD.	MORSE RD.
6912	INT# 6912: CLEVELAND AVE. AT COOKE RD./ PEGG RD.	CLEVELAND AVE.
6909	INT# 6909: CLEVELAND AVE. AT HUY RD.	CLEVELAND AVE.
6910	INT# 6910: CLEVELAND AVE. AT INNIS RD.	CLEVELAND AVE.
6911	INT# 6911: CLEVELAND AVE. AT ELMORE AVE.	CLEVELAND AVE.

INT #	INTERSECTION NAME	CORRIDOR
6912	INT# 6912: CLEVELAND AVE. AT NORTHERN LIGHTS	CLEVELAND AVE.

Source: City of Columbus

E.5 APPENDIX C: LANE ID ASSIGNMENT METHOD

It is recommended that the approaches and the lanes be numbered in a clockwise progression. To provide some structure to lane ID enumeration, all approach lane objects for a particular approach will fall into a pre-determined range of Lane IDs starting from the north-most approach. For a common four-way approach intersection, the first grouping of Lane IDs is assigned to the north-most approach. The approach groups progress in a clockwise direction around the intersection until all approaches have been assigned, as indicated in **Figure 36**.

The local convention allows for up to 32 lane objects to be assigned to each approach (see **Table 14** for ranges) Though expected to be infrequent, there may be special cases in which there are more than 32 lane objects are needed for an approach – in this case, Lane IDs from other groups will have to be used. There is no established convention for this case but will be coordinated between the FCEO and DPS should the need arise.

Finally, the lanes within each approach are assigned. The LaneID values are simply assigned in a sequential left to right process, followed by crossing approaches, as shown in **Figure 37**. Note that the lane types that are chosen to be shown in a MAP message do not necessarily need to be displayed. While vehicle, bicycle, and crosswalk lane types will be considered essential, other features such as sidewalks, medians, and other striped sections of pavement may be considered optional.

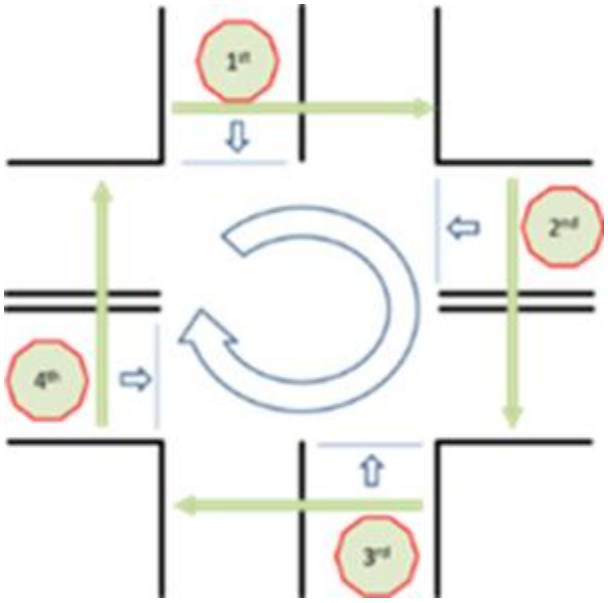

Figure 36: Approach Group Assignment for a Typical Four-Way Intersection

Source: http://dsrc-tools.com/map-spat/ (now offline)

Table 14: Lane ID Ranges for Each Approach Group

Range		Approach Group Description (Typical 4-Way Intersection)	Reference
(decimal)	(hex)		
0	0x00	not available or not known	SAE J2735
1- 15	0x01 – 0x0F	special case (typically not used)	Local Principles for Lane ID Assignment
16- 47	0x10 – 0x2F	north-most approach	
48- 79	0x30 – 0x4F	east approach (or next clockwise approach)	
80-111	0x50 – 0x6F	south approach (or next clockwise approach)	
112-143	0x70 – 0x8F	west approach (or next clockwise approach)	
144-175	0x90 – 0xAF	other approach (or next clockwise approach)	
176-207	0xB0 – 0xCF	other approach (or next clockwise approach)	
208-239	0xD0 – 0xEF	other approach (or next clockwise approach)	
240-254	0xF0 – 0xFE	flyover approaches	
255	0xFF	reserved for future use	SAE J2735

Source: City of Columbus

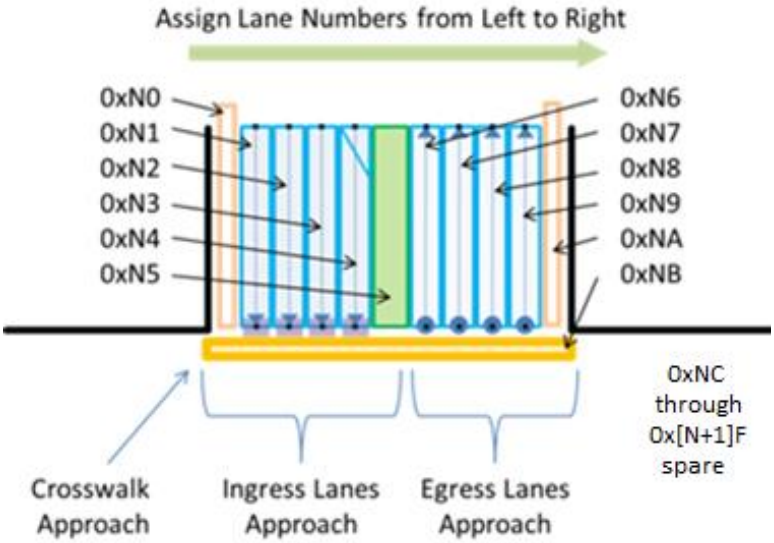

Figure 37: Lane ID Assignments for Each Approach Group

Note: Perspective oriented in the outbound/egress direction of the approach.

Source: http://dsrc-tools.com/map-spat/ (now offline)

Appendix F. Product Sheets

Figure 38: Kapsch RIS-9160 RSU Product Sheet

kapsch
challenging limits

Kapsch TrafficCom

Kapsch RIS-9160.

V2X Roadside ITS Station.

RIS-9160 is the latest generation Kapsch 5.9GHz Roadside Unit (RSU). RIS-9160 provides IEEE 802.11p™ wireless communication for both the ETSI ITS G5 and IEEE WAVE standards for applications within the Cooperative ITS (C-ITS) environment and ITS applications based on communication technology in general. Various configuration options and open interfaces contribute to the scalable and future proof RIS-9160 platform. The RIS-9160 provides fast data exchange between vehicles and the infra-structure e. g. Traffic Management Center or Signal Controllers to enable full capabilities of cooperative systems.

The V2X Roadside Unit supports up to two 5.9GHz radio channels and is based on a ruggedized high performance Linux driven dual-core 64 Bit single board computer platform utilizing extensive interface capabilities while keeping the advantages of Power Over Ethernet (PoE) feed-in and passive cooling.

The product comes with standard compliant V2X communication stack as needed for deployment in IEEE WAVE™ and ETSI ITS G5 based cooperative systems. A software development kit (SDK) is available for integrators and infrastructure operators allowing them to create own software applications running on the device.

Due to its modular design the product is able to be delivered in different hardware configurations. The modularity helps sustainable infrastructure investments with respect to evolutions within the C-ITS environment, especially in technical, legislative and standardization aspects.

The IP67/NEMA 4X conform housing is made of die cast aluminum designed for long life roadside deployments in rural and urban environments.

Extended temperature range, shock and vibration durability combined with high MTBF are the key factors for sustainable, reliable and maintenance-efficient large-scale field deployments.

RIS-9160 represents the latest generation of Roadside ITS Stations (R-ITS-S) providing V2X applications a powerful computer platform for "Day 1" V2X use cases and beyond.

The product targets the worldwide 5.9 GHz ITS market and thus is compliant to EC RED and US FCC radio regulations.

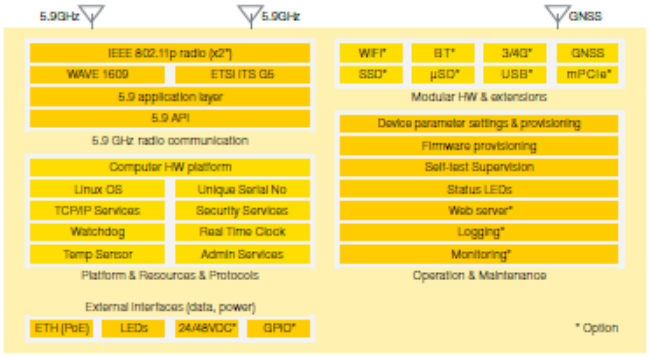

Interfaces:
IEEE 802.11p(TM) (ITS G5 and IEEE WAVE)
WAN Ethernet (PoE)
WAN Cellular Network
Traffic Management Center / Central ITS Station
Traffic Light Controller

References:

ECo-AT ETSI World Class Standards Nordic WAY

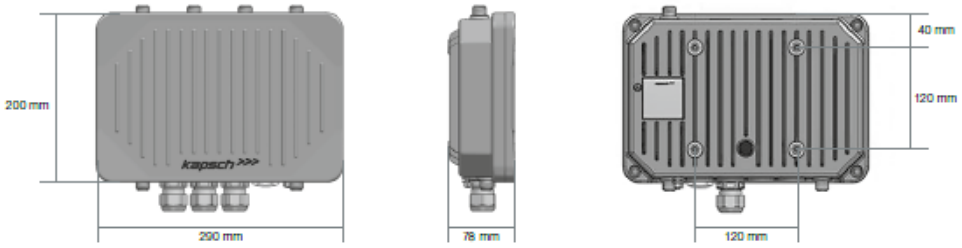

Technical features.

ITS protocol standards
- IEEE 802.11p™/IEEE 802.11™
- SAE J2735 2016
- ETSI ITS-G5 standard set
- IEEE WAVE 2016 standard set

5.9GHz radio characteristics
- IEEE 802.11p™ radio
- Frequency band: 5.850 – 5.925 GHz
- 10 MHz channel spacing
- Output power: max. 20 dBm
- Sensitivity: typ. -92 dBm @ 6 Mbps
- Antenna 1 or 2

Power supply
- PoE 802.3at-2009
- < 14 W (basic configuration) max. < 25 W

Enclosure
- IP67, IEC 60529

Positioning and time (pps)
- Multi GNSS (GPS, GLONASS, Galileo, BDS)

External interfaces (incl. options)
- 2 x 5.9 GHz Antenna 50 Ohm, N female
- 1 x GBit Ethernet (1 x PoE feed-in)
- 1 x GPS, N female
- 3 x Auxiliary, N female (e.g. LTE)*
- 3 x GPIO* in, 3 x GPIO* out
- 2 x LED, 3-color (power, status) +2 x*

* Option

Security
- ECC
- Hardware Security Module

Environmental conditions
- Operation: -40 °C to +74 °C
- Storage: -40 °C to +85 °C
- Protection: NEMA Type 4X, IP67

MTBF
- > 100.000 hours

Mechanical
- Aluminium die-cast
- Dimension: 290 x 200 x 78 mm (wo installation bracket)
- Weight: 3 kg

General conformity
- FCC, CE

Configuration options
- Cellular modem module (3G/LTE)
- WiFi module
- BT module
- 3 x GPIO in, 3 x GPIO out
- 24 V/48 V DC

Computer platform
- 1,33 GHz, 64 Bit, dual-core
- x86 CPU Architecture, 1 GB RAM ECC
- 4 GB Flash
- SD-Card Slot
- SSD Slot

Figure 39: Danlaw RouteLink RSU Product Sheet

DATASHEET

DANLAW
AUTOMOTIVE MADE SMART

RouteLink - Roadside Unit

Danlaw's RouteLink Roadside Unit (RSU) communicates between in-vehicle/mobile devices and transportation infrastructure, such as traffic controller equipment and backhaul networks. As the central member in C-V2X or DSRC systems, the RSU applications focus on safety and congestion management. RouteLink alerts drivers to adverse driving conditions, enables pre-emption for first responders, and grants signal priority to buses and service vehicles.

RouteLink utilizes the IEEE 1609 Wireless Access in Vehicular Environments (WAVE) standards to provide IPv6/IPv4 data to remote hosts, while broadcasting and receiving DSRC messages, as defined by SAE J2735, to mobile equipment. Locally, connections are provided for traffic controller equipment to be integrated in the system.

Features

- Easy to install
- On-board GPS for location services and synchronization
- PoE with surge protection
- FCC Certified
- Support for custom development
- Remote management tool suite

Typical Message Support

- WSA broadcasts
- Traveler information messages
- Roadside alert
- SSM and SRM messages
- SPaT and MAP messages
- RTCM messages

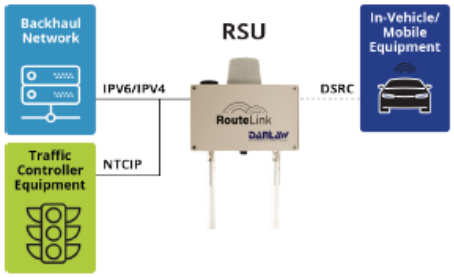

Application Examples

- Traffic Signal Coordination
- Emergency Vehicle Management
- Law Enforcement Systems
- Traffic Monitoring and Control
- Access and Parking Systems
- Transit Signal Priority
- Platooning
- Eco-Speed Harmonization

Safety Application Examples

- Red light violation warning
- Traffic signal violation warning
- Reduced speed zone warning
- Curve speed warning
- Intersection movement assist
- Left turn assist

This document is provided for information purposes only and the contents hereof are subject to change without notice.

Version: V8 CONFIDENTIAL AND PROPRIETARY

Copyright © 2019, Danlaw, Inc. and/or its affiliates. All rights reserved.

Danlaw Inc. | www.danlawinc.com

DATASHEET

DANLAW
AUTOMOTIVE MADE SMART

Roadside Unit

Product Specifications	
Dimensions	10.5" x 7.5" x 3.5"
Temperature	-34°C to +74°C
Processor	800 MHz, iMX6 Dual Core
Memory	1 GB DDR RAM
Storage	8 GB Flash
Interfaces	2 x DSRC or C-V2X Radios, 1 x WiFi, 1 x Ethernet, 1 x Cellular
GPS	Location and time synchronization
Hardware Security Module (HSM)	Yes
Power Requirement	IEEE 802.3at POE
Enclosure	NEMA4X (IP66) rated
Antenna Connectors	2 N-Type Female DSRC
LED Indicators	Power, Status
FCC Compliance	FCC, CFR 47 Part 90
Traffic Controller Compatibility	Compatible with NTCIP compliant traffic controllers, plus custom options
Standard Support	IEEE 802.11p, IEEE 1609.2, IEEE1609.3, IEEE 1069.4, SAE J2735, NTCIP, SNMP, USDOT v4.1 RSU specification
Networking	IPv6 and IPv4 support, SSL, SSH, TLS

Mounting Kit and PoE Injector sold separately.

Front View Side View

Related Products

AutoLink - V2X Aftermarket Safety Device
Danlaw's V2X Aftermarket Safety Device provides 360-degree situational awareness on the road and alerts drivers to potential hazards. Warning notifications will be sent to the driver through an LED display, infotainment system, or audio output.

Through Glass Antenna
Keep drivers safe on the road with Danlaw's dual-radio glass mounted antenna. The anntenna is adjustable to most windshield angles and can be easily installed without drilling holes through the vehicle.

Contact Us

Danlaw, Inc.
41131 Vincenti Court
Novi, Michigan 48375 USA
Tel: 1 (248) 476-5571
Fax: 1 (248) 471-4485
sales@danlawinc.com

All logos in this document are the property of their respective owners.

This document is provided for information purposes only and the contents hereof are subject to change without notice.

Danlaw reserves all rights to this document and the information contained herein. No warranty or guarantee of any kind, either express or implied, is made in relation to the accuracy, reliability fitness for a particular purpose or content of this document.

Copyright © 2019, Danlaw, Inc. and/or its affiliates. All rights reserved.

THE CITY OF COLUMBUS
ANDREW J. GINTHER, MAYOR

Figure 40: MOXA UC-8100 Product Sheet

Power Computers

UC-8100 Series

Communication-centric RISC computing platform

- ARMv7 Cortex-A8 300/600/1000 MHz processor
- Dual auto-sensing 10/100 Mbps Ethernet ports
- SD socket for storage expansion and OS installation
- Rich programmable LEDs and a programmable button for easy installation and maintenance
- Mini PCIe socket for cellular module
- Debian ARM 7 open platform
- Cybersecurity

Overview

The UC-8100 computing platform is designed for embedded data acquisition applications. The computer comes with one or two RS-232/422/485 serial ports and dual 10/100 Mbps Ethernet LAN ports, as well as a Mini PCIe socket to support cellular modules. These versatile communication capabilities let users efficiently adapt the UC-8100 to a variety of complex communications solutions.

The UC-8100 is built around a Cortex-A8 RISC processor that has been optimized for use in energy monitoring systems, but is widely applicable to a variety of industrial solutions. With flexible interfacing options, this tiny embedded computer is a reliable and secure gateway for data acquisition and processing at field sites as well as a useful communication platform for many other large-scale deployments.

Wide temperature (T) models* are also available for extended temperature applications. All units are thoroughly tested in a testing chamber, guaranteeing that the computing platforms are suitable for wide temperature applications.

Appearance

Front View

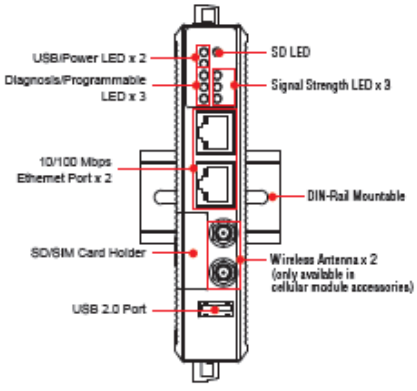

Top View

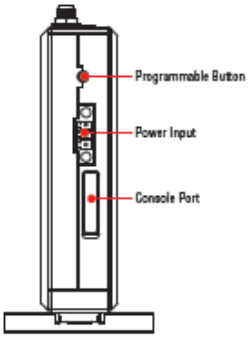

Bottom View

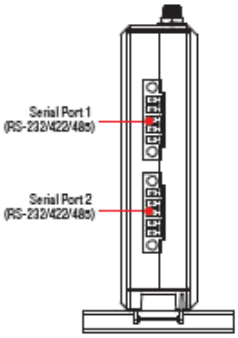

1 MOXA CONFIDENTIAL AND PROPRIETARY www.moxa.com

Dimensions

Unit: mm (Inch)

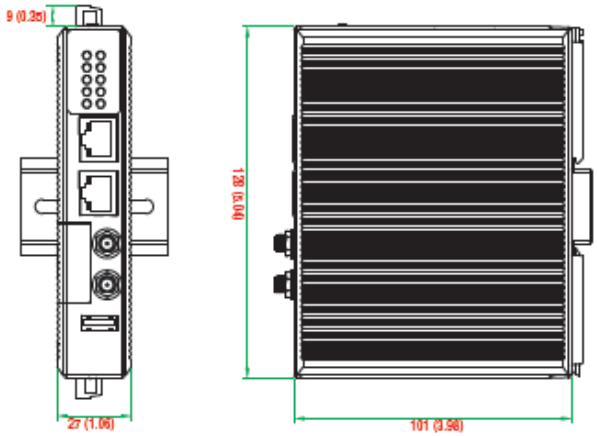

Hardware Specifications

Computer

CPU: ARMv7 Cortex-A8 300/600/1000 MHz
USB: USB 2.0 hosts x 1, Type A connector
DRAM: DDR3 SDRAM:
UC-8112-LX: 512 MB
UC-8162-LX: 512 MB
UC-8132-LX: 256 MB
UC-8131-LX: 256 MB
OS (pre-installed): Debian ARM 7 (Kernel 3.2)

Storage

Main Storage:
• 1 GB SD card with OS pre-installed (UC-8131/8132/8162 only)
• 2 GB micro SD card with OS pre-installed (UC-8112 only)
Storage Expansion: SD socket for storage expansion (UC-8112-LX only)

Ethernet Interface

LAN: Auto-sensing 10/100 Mbps ports (RJ45) x 2
Magnetic Isolation Protection: 1.5 kV built-in

Serial Interface

Serial Standards: RS-232/422/485 ports, software-selectable (5-pin terminal block connector) x 1 or 2
Console Port: RS-232 (TxD, RxD, GND), 4-pin pin header output (115200, n, 8, 1)

Serial Communication Parameters

Data Bits: 5, 6, 7, 8
Stop Bits: 1, 1.5, 2
Parity: None, Even, Odd, Space, Mark
Flow Control: XON/XOFF, ADDC® (automatic data direction control) for RS-485
Baudrate: Max. 921600 bps

Serial Signals

RS-232: TxD, RxD, RTS, CTS, GND
RS-422: TxD+, TxD-, RxD+, RxD-, GND
RS-485-4w: TxD+, TxD-, RxD+, RxD-, GND
RS-485-2w: Data+, Data-, GND

LEDs

System: Power x 1, USB x 1, SD x 1, signal strength x 3 (UC-8112/8162/8132 with cellular module)
LAN: 10M/100M on connector
Programmable: Diagnosis x 3

Switches and Buttons

Push Button: Initially configured to return a diagnostic report, and to reset the device to factory defaults

Physical Characteristics

Housing: Polycarbonate plastic
Weight: 224 g (0.50 lb)
Dimensions: 101 x 27 x 128 mm (3.98 x 1.06 x 5.04 in)
Mounting: DIN-rail, wall (with optional kit)

Environmental Limits

Operating Temperature:
Standard Models: -10 to 60°C (14 to 140°F)
Wide Temp. Models: -40 to 75°C (-40 to 167°F)
Storage Temperature: -40 to 80°C (-40 to 176°F)
Ambient Relative Humidity: 5 to 95% (non-condensing)
Anti-Vibration: 2 Grms @ IEC 60068-2-64, random wave, 5-500 Hz, 1 hr per axis (without any USB devices attached)
Anti-Shock: 20 g @ IEC 60068-2-27, half sine wave, 30 ms

Power Requirements

Input Voltage: 12 to 24 VDC (3-pin terminal block, V+, V-, SG)
Input Current:
• 450 mA @ 12 VDC
• 225 mA @ 24 VDC
Power Consumption: 5.4 W (without cellular module and external USB device attached)

Standards and Certifications

Safety: UL 60950-1, EN 60950-1
EMC: EN 61000-6-2/6-4
EMI: CISPR 22, FCC Part 15B Class A

EMS:
IEC 61000-4-2 ESD: Contact: 8 kV; Air: 15 kV
IEC 61000-4-3 RS: 80 MHz to 1 GHz: 10 V/m
IEC 61000-4-4 EFT: Power: 4 kV; Signal: 4 kV
IEC 61000-4-5 Surge: Power: 4 kV; Signal: 4 kV
IEC 61000-4-6 CS: Signal: 10 V
IEC 61000-4-8: 20 A/m
IEC 61000-4-9: 300 A/m
Green Product: RoHS, CRoHS, WEEE

Reliability

Alert Tools: Built-in RTC (real-time clock)
Automatic Reboot Trigger: Built-in WDT (watchdog timer)

MTBF (mean time between failures)

Time:
UC-8162-T-LX: 301,648 hrs
UC-8132-T-LX: 302,648 hrs
UC-8131-T-LX: 315,063 hrs
UC-8112-T-LX: 1,181,598 hrs
UC-8162-LX/UC-8132-LX: 1,195,173 hrs
UC-8131-LX: 1,465,546 hrs
UC-8112-LX: 1,149,242 hrs
Standard: Telcordia (Bellcore) Standard TR/SR

Warranty

Warranty Period: 5 years
Details: See www.moxa.com/warranty

Software Specifications

Linux

OS: Debian ARM 7
Web Server (Apache): Allows you to create and manage web sites; supports PHP and XML
Terminal Server (SSH): Provides secure encrypted communications between two un-trusted hosts over an insecure network
Kernel: GNU/Linux 3.2
System Shell: DASH (default), BASH
Text Editor: vim, nano
Internet Protocol Suite: TCP, UDP, IPv4, IPv6, SNMPv2, ICMP, ARP, HTTP, CHAP,PAP,DHCP, NTP,NFS, SSH, PPP, SFTP, RSYNC, SSL
Programming Language Support: PHP, Perl, Python
Internet Security Suite: OpenVPN, Iptables
Cryptographic Hardware Accelerators: AES, SHA, OpenSSL
Self Diagnosis: Check status of system and hardware component via software method
Linux Board Support Packages (BSP):
• GCC C/C++ cross development tool chain
• Bootloader/ Kernel/ filesystem
Cellular Networking: (UC-8132-LX, UC-8162-LX, UC-8112-LX only)
• WVDIAL: Point-to-Point Protocol dialer that dials a modem and starts pppd to connect to the Internet.
• QMI (Qualcomm MSM Interface): Glib-based library for talking to WWAN modems and devices that speak the Qualcomm MSM Interface (QMI) protocol.
• MODBUS: Software library to send/receive data according to the Modbus protocol. This library is written in C and supports RTU (serial) and TCP (Ethernet) communications.
• Watchdog: Features a hardware function to trigger system reset in a user specified time interval (Linux standard API).
Cybersecurity:
• Secure Boot: A novel authentication algorithm proposed to secure platform integration. Only trusted Linux kernel and bootloader should be executed (Patent Pending).
• SUDO Mechanism: Sudo (sometimes considered short for Super-user Do) is a program designed to let system administrators allow some users to execute some commands as root (or another user). The basic philosophy is to give as few privileges as possible but still allow people to get their work done, and the Root account is disabled by default.
• Security Update of existing software packages: All packages in the UC-8100 could be updated for security purposes via Debian or Moxa's Advanced Packaging Tool (APT) server.
• USB Protection: Provides a mechanism for disabling USB function to avoid USB stick malware attacks.
• SD Write Protection: Provides a mechanism for disabling SD write permission both in the filesystem SD and extended storage SD. (Note: Extended storage SD is only supported by the UC-8112-LX).

Ordering Information

Model	CPU	RAM	Serial	Ethernet	Mini PCIe Socket for Wireless Module	Micro SD Socket	SD Socket
UC-8112-LX	1 Ghz	512 MB	2	2	✓	✓ (2 GB MicroSD card with OS pre-installed)	✓ (SD card not attached)
UC-8162-LX	600 Mhz	512 MB	2	2	✓	–	✓ (1 GB SD card with OS pre-installed)
UC-8132-LX	300 Mhz	256 MB	2	2	✓	–	✓ (1 GB SD card with OS pre-installed)
UC-8131-LX	300 Mhz	256 MB	1	2	–	–	✓ (1 GB SD card with OS pre-installed)

Package Checklist (computer)
- UC-8100 embedded computer
- Power jack
- 3-pin terminal block for power
- 5-pin terminal block for UART x 2

Optional Accessories

Power Adapters & Cords, Console Cable		
Adapter	PWR-24250-DT-S1	Power adapter with input: 100-240 VAC, 50-60 Hz, 1.5 A Output: 24 VDC, 2.5 A, 60 W for test and system development in the office under ambient temperature
Power Cord	PWC-C7US-2B-183	Power cord with 2-pin connector, USA plug
Power Cord	PWC-C7EU-2B-183	Power cord with 2-pin connector, Euro plug
Power Cord	PWC-C7UK-2B-183	Power cord with 2-pin connector, British plug
Power Cord	PWC-C7AU-2B-183	Power cord with 2-pin connector, Australia plug
Power Cord	PWC-C7CN-2B-183	Power cord with 2-pin connector, China plug
Console Cable	CBL-F9DPF1x4-BK-100	Console cable with 4-pin connector
Wireless Package		
Cellular Package	CELLULAR-LTE-US	LTE module mounting package: • Cellular module x 1 • I-PEX MHF to SMA adapter with cable x 1 • Mini PCI/e mounting screw sets x 2
Cellular Package	CELLULAR-LTE-EU	LTE module mounting package: • Cellular module x 1 • I-PEX MHF to SMA adapter with cable x 1 • Mini PCI/e mounting screw sets x 2
Cellular Package	CELLULAR-3G-EVDO-HSPA+	3G module mounting package: • Cellular module x 1 • I-PEX MHF to SMA adapter with cable x 1 • Mini PCI/e mounting screw sets x 2
WIFI Package	WIFI-BGN	WIFI module mounting package: • WIFI module x 1 • I-PEX MHF to RP-SMA adapter with cable x 1 • Mini PCI/e mounting screw sets x 2
Antennas and Internal Antenna Cables		
GPS Antenna	ANT-GPS-OSM-05-3M	Active GPS antenna, 26 dBi, 1572 MHz, L1 band antenna for GPS
3G Antenna	ANT-3G-SMA	SMA male antenna for cellular, support bands: 850/900/1800/1900/2100 MHz
4G Antenna	ANT-LTE-OSM-03-3m BK	Multi-band antenna that covers 700-2700 MHz. Specially designed for 2G, 3G, and 4G applications. Magnetic mounting is available.
4G Antenna	ANT-LTE-ASM-04 BK	LTE stick antenna that covers 704-960/1710-2620 MHz providing omnidirectional radiation with a gain of 4.5 dBi.
4G Antenna	ANT-LTE-ASM-05 BK	LTE stick antenna that covers 704-960/1710-2620 MHz with a gain of 5 dBi.
4G Antenna	ANT-LTE-OSM-06-3m BK MIMO	Multi-band antenna that covers 700-2700/2400-2500/5150-5850 MHz frequencies. Screw-fastened mounting and full IP67 waterproofing are available.
WIFI Antenna	ANT-WDB-ARM-02	RP-SMA male antenna for WIFI; supports the 2.4 GHz band.
Cellular antenna cable	A-CRF-MHFSF	I-PEX MHF (male, on cellular module) to SMA (female, on top cover) adapter with cable. For when you need to install a GPS antenna or second cellular antenna.
WIFI antenna cable	CRF-MHF/SMA(M)-14.2	I-PEX MHF (male, on cellular module) to RP-SMA (female, on top cover) adapter with cable. For when you need to install a second WIFI antenna.
Mounting Kits		
Wall-mounting Kit	WALLMOUNT-8100-01	Wall-mounting kit with screws

MOXA © Moxa Inc. All rights reserved. Updated Sep 6, 2016. Specifications subject to change without notice. Please visit our website for the most up-to-date product information.
CONFIDENTIAL AND PROPRIETARY

Figure 41: MobileMark DSRC Antenna Product Sheet

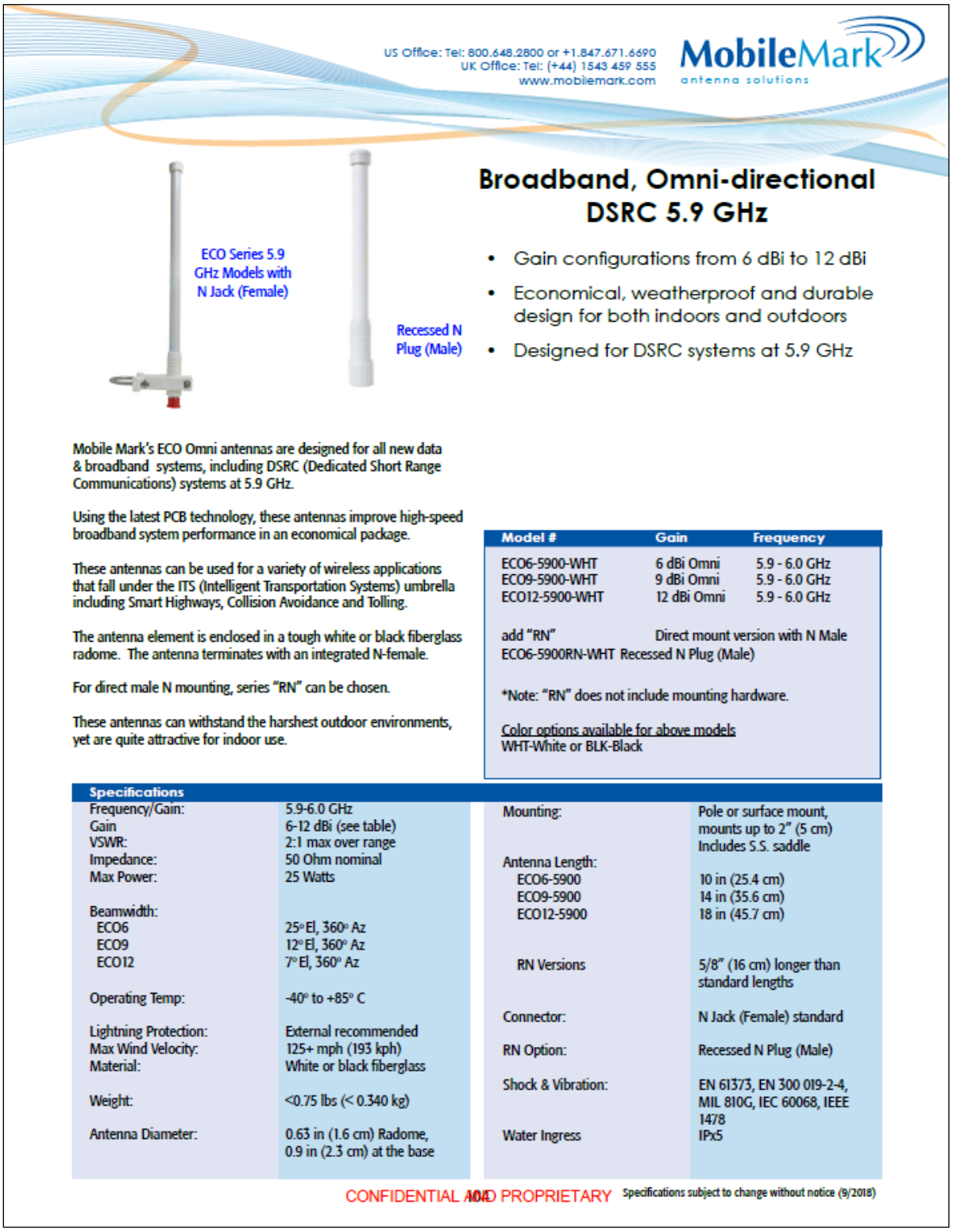

US Office: Tel: 800.648.2800 or +1.847.671.6690
UK Office: Tel: (+44) 1543 459 555
www.mobilemark.com

MobileMark
antenna solutions

ECO Series 5.9 GHz Models with N Jack (Female)

Recessed N Plug (Male)

Broadband, Omni-directional DSRC 5.9 GHz

- Gain configurations from 6 dBi to 12 dBi
- Economical, weatherproof and durable design for both indoors and outdoors
- Designed for DSRC systems at 5.9 GHz

Mobile Mark's ECO Omni antennas are designed for all new data & broadband systems, including DSRC (Dedicated Short Range Communications) systems at 5.9 GHz.

Using the latest PCB technology, these antennas improve high-speed broadband system performance in an economical package.

These antennas can be used for a variety of wireless applications that fall under the ITS (Intelligent Transportation Systems) umbrella including Smart Highways, Collision Avoidance and Tolling.

The antenna element is enclosed in a tough white or black fiberglass radome. The antenna terminates with an integrated N-female.

For direct male N mounting, series "RN" can be chosen.

These antennas can withstand the harshest outdoor environments, yet are quite attractive for indoor use.

Model #	Gain	Frequency
ECO6-5900-WHT	6 dBi Omni	5.9 - 6.0 GHz
ECO9-5900-WHT	9 dBi Omni	5.9 - 6.0 GHz
ECO12-5900-WHT	12 dBi Omni	5.9 - 6.0 GHz
add "RN"	Direct mount version with N Male	
ECO6-5900RN-WHT	Recessed N Plug (Male)	

*Note: "RN" does not include mounting hardware.

Color options available for above models
WHT-White or BLK-Black

Specifications

Frequency/Gain:	5.9-6.0 GHz	Mounting:	Pole or surface mount, mounts up to 2" (5 cm) Includes S.S. saddle
Gain	6-12 dBi (see table)		
VSWR:	2:1 max over range		
Impedance:	50 Ohm nominal	Antenna Length:	
Max Power:	25 Watts	ECO6-5900	10 in (25.4 cm)
		ECO9-5900	14 in (35.6 cm)
Beamwidth:		ECO12-5900	18 in (45.7 cm)
ECO6	25° El, 360° Az		
ECO9	12° El, 360° Az	RN Versions	5/8" (16 cm) longer than standard lengths
ECO12	7° El, 360° Az		
Operating Temp:	-40° to +85° C	Connector:	N Jack (Female) standard
Lightning Protection:	External recommended	RN Option:	Recessed N Plug (Male)
Max Wind Velocity:	125+ mph (193 kph)	Shock & Vibration:	EN 61373, EN 300 019-2-4, MIL 810G, IEC 60068, IEEE 1478
Material:	White or black fiberglass	Water Ingress	IPx5
Weight:	<0.75 lbs (< 0.340 kg)		
Antenna Diameter:	0.63 in (1.6 cm) Radome, 0.9 in (2.3 cm) at the base		

CONFIDENTIAL AND PROPRIETARY Specifications subject to change without notice (9/2018)

Figure 42: QVT-14 GPS Antenna Product Sheet

JDGA

GPS antennas for demanding requirements

QVT-14 Quad V Twist-On Stubby Active GPS Antenna 14dB

Impact resistant / Submersible

Frequency	1575.MHz
Beam Width	>135 degrees (Can be used in inverted position)
Impedance	50 ohm
Polarization	Linear
VSWR	< 2.0:1
Voltage	2.5-3.5Vdc
Current	7.5mA
Gain	14dB
Noise	0.7dB
Relative Humidity	10% to 95%
Operating Temperature	-40°C to +85°C
Storage Temperature	-50°C to +85°C
Connector	SMA Male
Composite Coating	Impact resistant / Submersible 100m+
Dimensions	15 (dia) X 55 (L) mm
Part No. Black Part No. Green Part No Tan	JDGA QVT-14 JDGA QVT-14-79A095-383 JDGA QVT-14-89A237-686A

RoHS COMPLIANT

JDGA 1411 E Campbell Rd Richardson TX 75081 972-699-9976 972-699-9977 (fax)

www.jdgagps.com

CONFIDENTIAL AND PROPRIETARY

JDGA

GPS antennas for demanding requirements

Azimuth

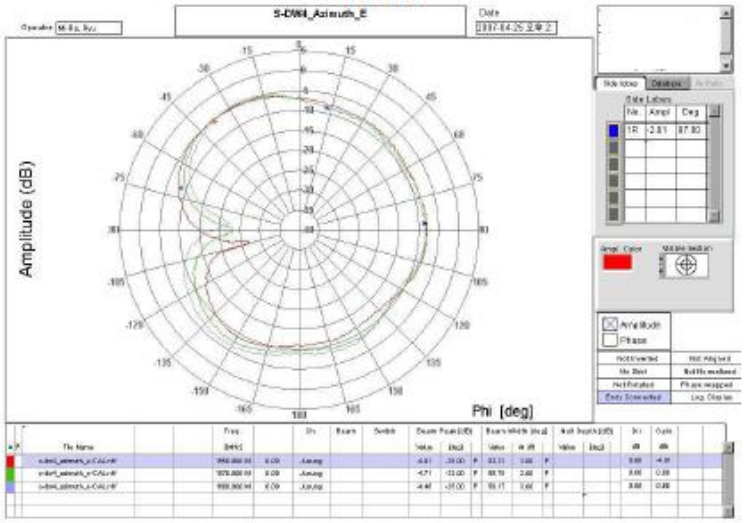

Elevation

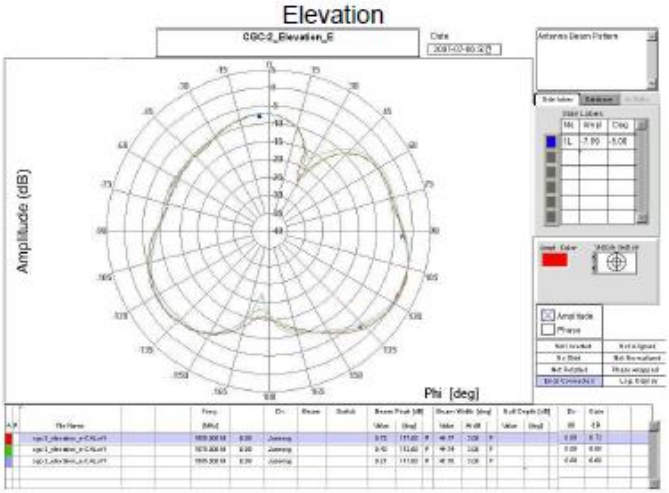

JDGA 1411 E Campbell Rd Richardson TX 75081 972-699-9976 972-699-9977 (fax)

www.jdgagps.com

CONFIDENTIAL AND PROPRIETARY

Figure 43: PD-9001 GI/DC POE Product Sheet

Microsemi
Power Matters.

PD-9001GI/DC
Single Port 30W Industrial PoE Midspan

Features and Benefits

- IEEE 802.3at compliant – 30W output
- Dual DC input – 20-60VDC range
- Industrial rated IP30
- Extended temp range -40 °C - +75 °C
- Plug and play installation
- Supports 10/100/1000 Mbps

Overview

Microsemi's PD-9001GI is a single port, high-power solution for remote powering of current and emerging high power applications. Generating up to 30W, the 9001GI enables remote power for a new range of applications including 802.11n Access Points, pan-tilt zoom (PTZ) cameras and other IP terminals. It complies to IEEE 802.3at PoE standard and is backward compatible to IEEE802.3af. It can power both 10/100Base-T network devices and 1000Base-T devices. The 9001GI is designed for industrial applications and outdoor applications from temperature point of view.

Specifications

Feature	Description
No. of Ports	1
Pass Through Data Rates	10/100/1000 Mbps
Output Power	Pin Assignment and Polarity: 4/5(+), 7/8(-) Output Power Voltage: 50Vdc User Port Power: 30W (Guaranteed)
Input Power Requirements	DC Input Voltage: 20 to 60Vdc DC Input Current: 2A max
Dimensions	31 mm (W) x 111 mm (H) x 78 mm (L)
Weight	0.77 lbs (315 g)
Indicator	Power 1 – Source power 1 is connected Power 2 – Source power 2 is connected Alarm – 1 source power is Fault PoE – IEEE802.3 PD is connected
Connectors	Shielded RJ-45, EIA 568A and 568B
Environmental Conditions	Operating Ambient Temperature: -40°F to 167°F (-40°C to 75°C)
	Storage Temperature: –40°F to 185°F (–40°C to 85°C)
Reliability	MTBF: 170,000 hours @ 25°C
Warranty	1-year
Regulatory	RoHS, WEEE, REACH
Electromagnetic Emission & Immunity	EN50522 Class A EN55024
Safety Approvals	UL 508
Shock	IEC 60068-2-27 15g, 11 ms duration
Freefall	IEC 60068-2-32
Vibration	IEC 60068-2-6 3, 5 mm, 3 Hz - 9 Hz, 10 cycles, 1 octave/min 1g, 9 Hz - 150 Hz, 10 cycles 1 octave/min

Ordering Information

Part Number	Description
PD-9001GI/DC	30W Industrial PoE Midspan, Dual DC input

CONFIDENTIAL AND PROPRIETARY

Microsemi
Power Matters.

PD-9001GI/DC
Single Port 30W Industrial PoE Midspan

Supported Installation (Accessory Included)

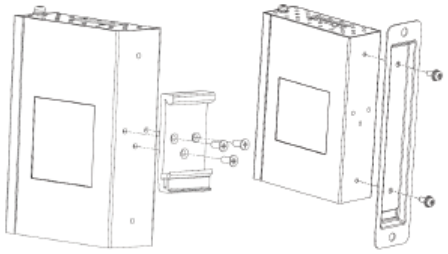

DIN Rail Wall Mount

Microsemi makes no warranty, representation, or guarantee regarding the information contained herein or the suitability of its products and services for any particular purpose, nor does Microsemi assume any liability whatsoever arising out of the application or use of any product or circuit. The products sold hereunder and any other products sold by Microsemi have been subject to limited testing and should not be used in conjunction with mission-critical equipment or applications. Any performance specifications are believed to be reliable but are not verified, and Buyer must conduct and complete all performance and other testing of the products, alone and together with, or installed in, any end-products. Buyer shall not rely on any data and performance specifications or parameters provided by Microsemi. It is the Buyer's responsibility to independently determine suitability of any products and to test and verify the same. The information provided by Microsemi hereunder is provided "as is, where is" and with all faults, and the entire risk associated with such information is entirely with the Buyer. Microsemi does not grant, explicitly or implicitly, to any party any patent rights, licenses, or any other IP rights, whether with regard to such information itself or anything described by such information. Information provided in this document is proprietary to Microsemi, and Microsemi reserves the right to make any changes to the information in this document or to any products and services at any time without notice.

Microsemi

Microsemi Corporate Headquarters
One Enterprise, Aliso Viejo, CA 92656 USA
Within the USA: +1 (800) 713-4113
Outside the USA: +1 (949) 380-6100
Sales: +1 (949) 380-6136
Fax: +1 (949) 215-4996
email: sales.support@microsemi.com
www.microsemi.com

Microsemi Corporation (Nasdaq: MSCC) offers a comprehensive portfolio of semiconductor and system solutions for communications, defense & security, aerospace and industrial markets. Products include high-performance and radiation-hardened analog mixed-signal integrated circuits, FPGAs, SoCs and ASICs; power management products; timing and synchronization devices and precise time solutions, setting the world's standard for time; voice processing devices; RF solutions; discrete components; security technologies and scalable anti-tamper products; Ethernet solutions; Power-over-Ethernet ICs and midspans; as well as custom design capabilities and services. Microsemi is headquartered in Aliso Viejo, Calif., and has approximately 3,600 employees globally. Learn more at www.microsemi.com.

© 2015 Microsemi Corporation. All rights reserved. Microsemi and the Microsemi logo are registered trademarks of Microsemi Corporation. All other trademarks and service marks are the property of their respective owners.

PD-9001GI/DC_DS Rev. 2.0 09-15

CONFIDENTIAL AND PROPRIETARY

Figure 44: Sensor Mount Product Sheet

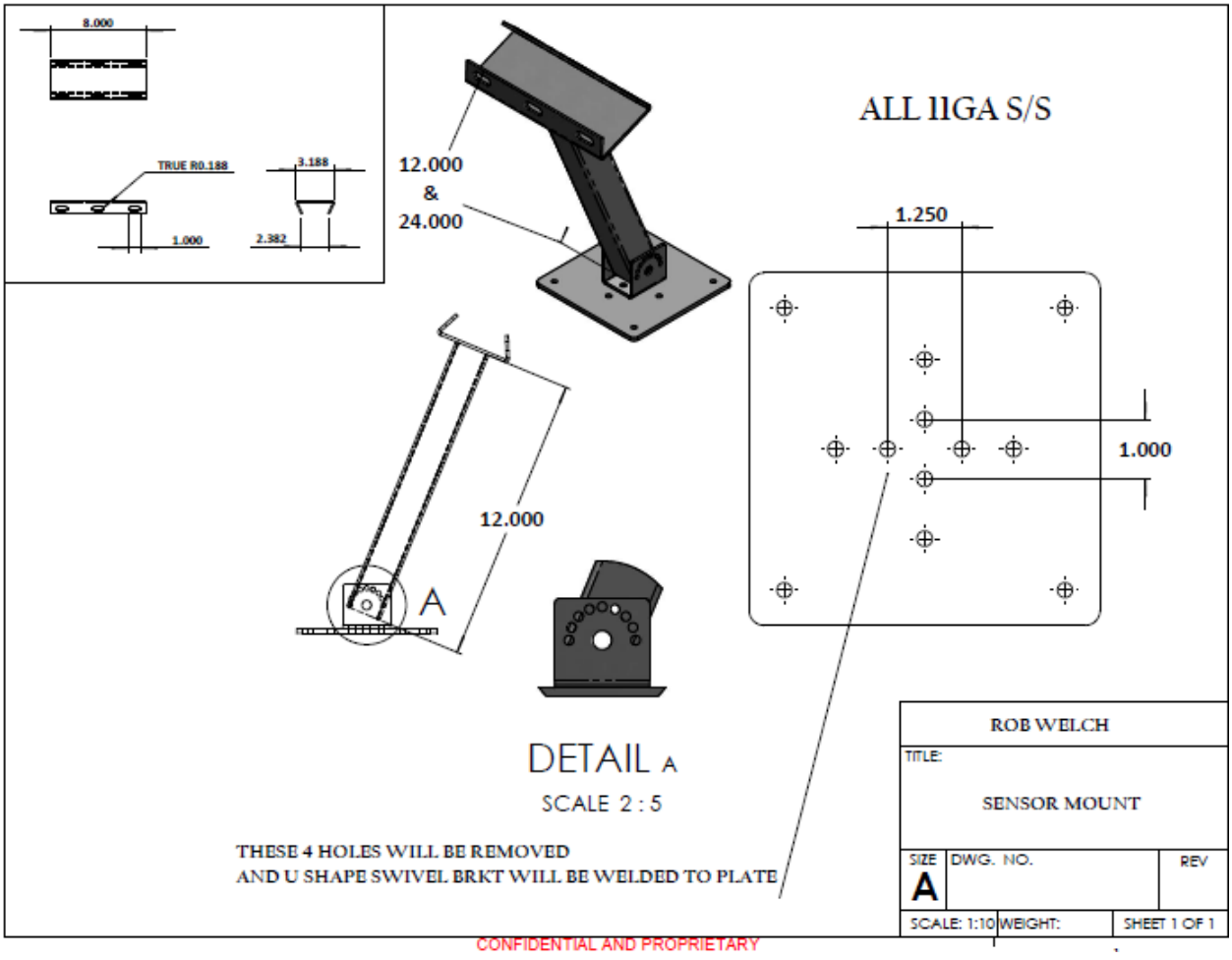

Figure 45: eWalk Pedestrian Safety System Product Sheet

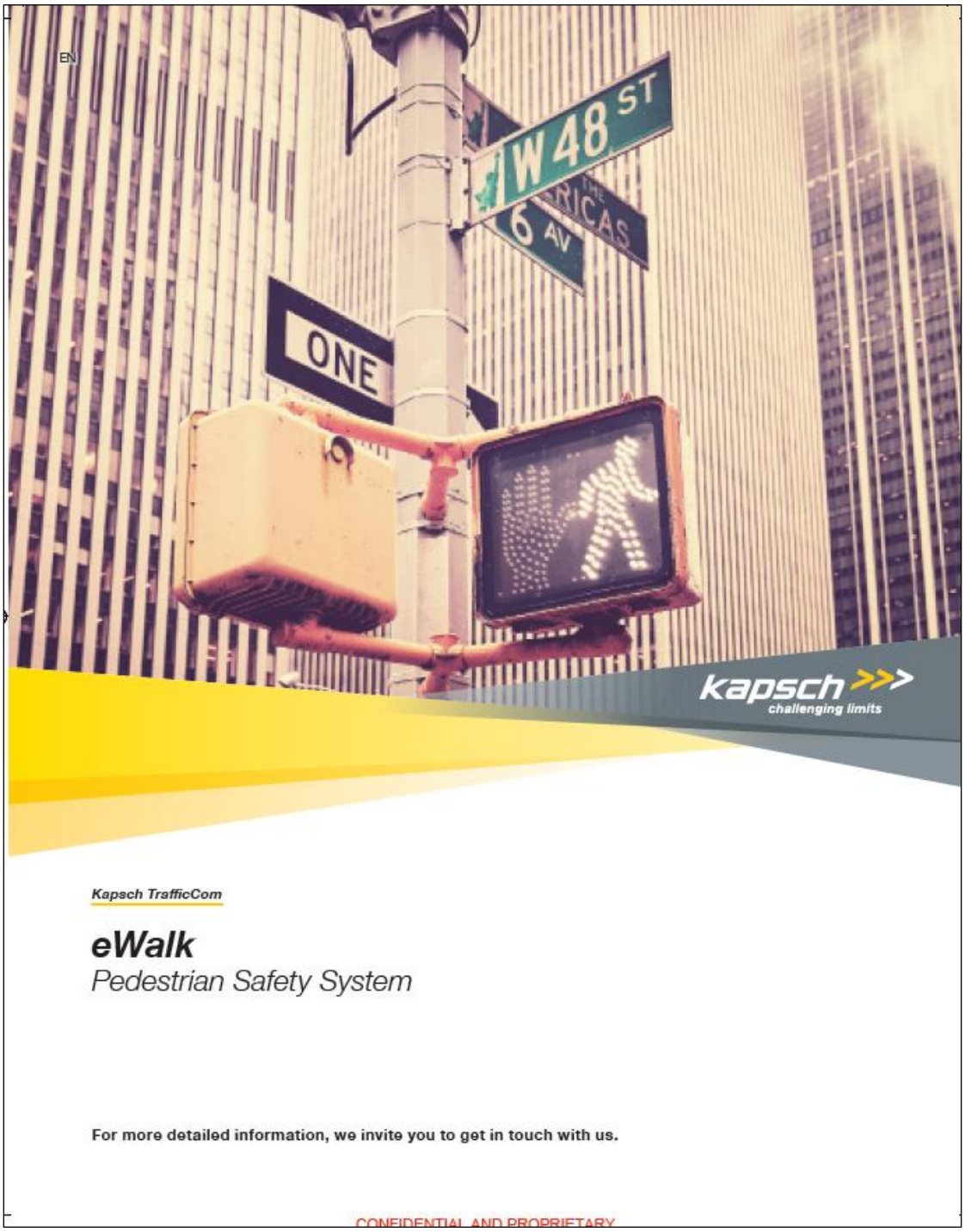

ewalk Pedestrian Safety System

According to a recent study by the Insurance Institute for Highway Safety, "pedestrian deaths have jumped 46% since reaching their lowest point in 2009, as pedestrian crashes have become both deadlier and more frequent". One group of particularly vulnerable pedestrians are the visually impaired and other people with special needs. Visually impaired and disabled pedestrians need extra help at intersections. In general, they:

- Find it difficult to navigate intersections and find crosswalks.
- Cannot find the pedestrian crossing actuation button.
- Do not have enough information about the status of the signal.
- Do not know when it is safe to start walking.
- Have difficulty staying within the crosswalk.

eWalk is a smartphone-based system that assists pedestrians, in particular the visually impaired or other pedestrians with special needs at signalized intersections, improving pedestrian safety by using connected transportation technologies. With the eWalk App, users can have a consistent and safer experience in crossing the street. In addition, eWalk can help cities ensure that their intersections are ADA compliant.

2 | Kapsch TrafficCom

CONFIDENTIAL AND PROPRIETARY

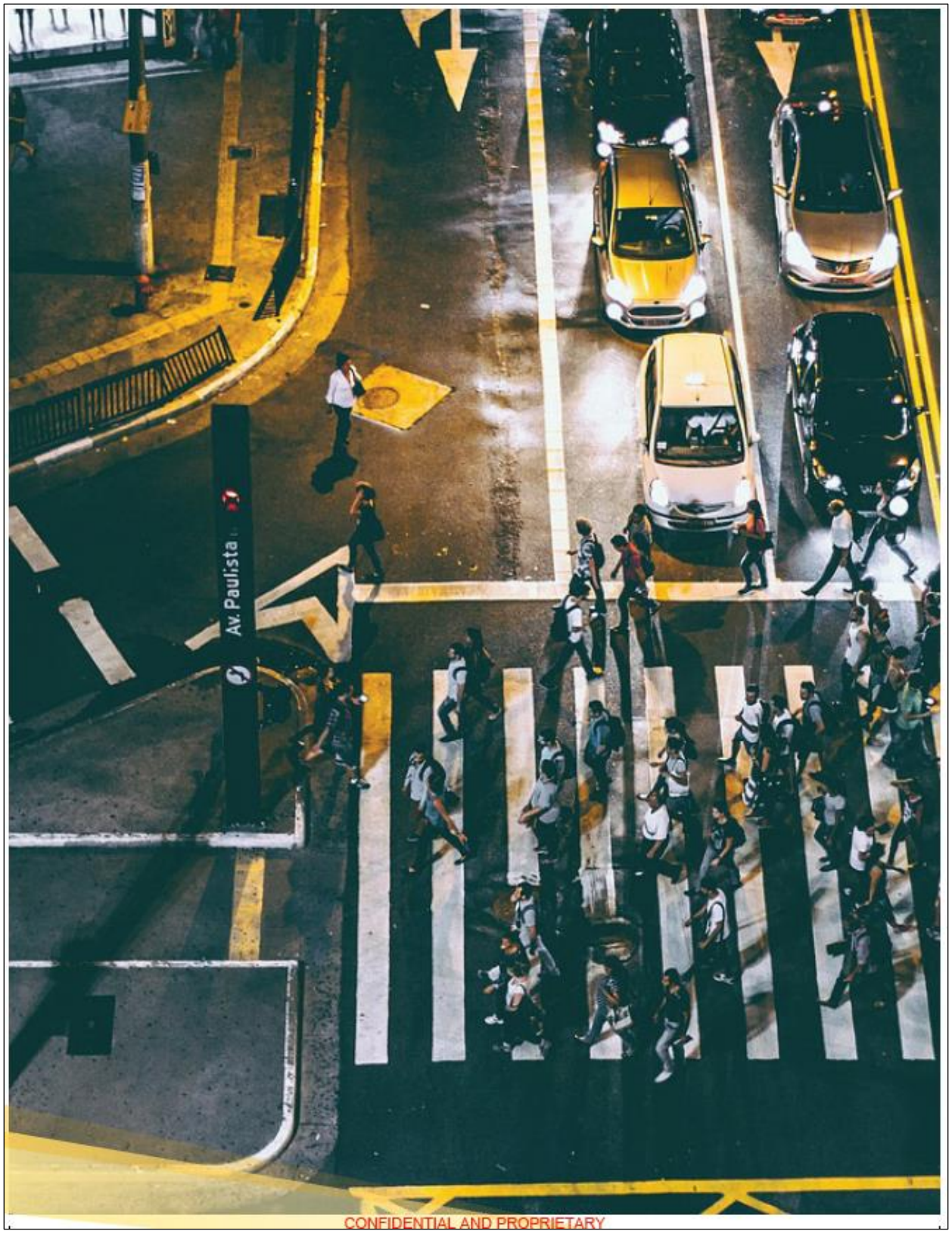
Av. Paulista
CONFIDENTIAL AND PROPRIETARY

The eWalk system provides the following major benefits to its users:

INTERSECTION INFORMATION

The App lets pedestrians know when they are approaching an intersection and what the cross streets are. Once at the intersection, the App lets them know when they have reached a crosswalk, information on the intersection layout, whether they are facing the crosswalk, and the name of the street they are looking to cross. All information is provided via both audio and visual prompts.

INTERSECTION CONTROL

Once facing a specific crosswalk, the eWalk App allows pedestrians to "press" the pedestrian cross button right from their phone, rather than having to try to find the correct physical button at the intersection. The App then informs pedestrians when it is safe to cross and when it is not.

CROSSWALK SUPPORT

A positional correction algorithm helps keep pedestrians within the crosswalk while crossing the street. This algorithm improves pedestrian location estimation, overcoming GPS positioning challenges as pedestrians navigate through the crosswalk. The App provides haptic vibration warnings if pedestrians begin to leave the crosswalk boundaries.

4 | Kapsch TrafficCom

CONFIDENTIAL AND PROPRIETARY

Using the eWalk App

At Startup, the eWalk App receives a set of MAP messages for intersections in that area. The MAP message is an industry standard message that provides a digital representation of the intersection. This allows the App to build a geo-fence around each intersection, which is used to determine when a pedestrian is near the intersection.

If the pedestrian is out of the intersection boundary, she/he is notified, "You are not near an intersection".

Once she/he enters the area defined for the intersection, the App informs that she/he is approaching a specific intersection. The intersection is identified by name to help pedestrians know they are in the proper place.

Once the App has determined that the pedestrian is near an intersection, location estimation, phone orientation, and geo-fencing allow eWalk to determine which crosswalk a pedestrian is facing. If the pedestrian is not near a crosswalk nor facing the proper direction, eWalk will provide feedback via the text-to-speech feature to the pedestrian that she/he is not aligned with the crosswalk and will not allow the pedestrian to request service.

Once the pedestrian is in the proper location and facing the right direction, she/he is prompted to decide if she/he wants to cross a specific street. Intersection and street names are contained in the MAP message. Text-to-speech technology is used to announce this information to the pedestrian.

Once the pedestrian has requested to cross a particular street, the smartphone displays pedestrian signal information using visual, haptic, and auditory messaging based on the signal status associated with the identified crosswalk.

eWalk uses the standard pedestrian signal head graphics and a combination of auditory and haptic alerts.

During the "WALK" and "DON'T WALK" intervals, the standard "WALK" and "DON'T WALK" graphics are displayed.

During the pedestrian clearance interval, a countdown timer (e.g. 10, 9, 8…) with an auditory countdown is displayed.

Once the pedestrian has begun crossing the street, the App will monitor the direction she/he is heading and provide haptic warnings if she/he begins to veer out of the crosswalk.

The eWalk functionality can be also embedded into other smartphone apps.

eWalk Communications

The eWalk App communicates via a cellular or Wi-Fi connection to the eWalk Central Control Center to receive information on the location and the geometry of intersections (MAP messages). It also communicates with the eWalk Central Control Center when pedestrians initiate cross requests. The eWalk Central Control Center communicates with the intersection's traffic controller to receive Signal Phase and Timing (SPaT) data and to make pedestrian walk requests.

The eWalk Central Control Center connects with Traffic Controllers managing intersections in a variety of ways, including DSRC or CV2X Roadside Units (RSUs) via a central traffic control center or a Kapsch Ped Activation Controller card in the traffic control box specifically designed to communicate the pedestrian crossing requests to the traffic controller. Each of these connection types is managed through the Comm Services module of the **Smart Cities Control Center.**

Safety with Vehicles

eWalk can be a Pedestrian to Infrastructure to Vehicle (P2I2V) solution. The eWalk solution interfaces with the Kapsch RSUs via the **Smart Cities Control Center** to provide information to vehicles about the pedestrians using eWalk. With this functionality, the system will broadcast out information about the pedestrian through both SPaT messages and Personal Safety Messages (PSM) sent out on behalf of the pedestrian using the eWalk App. This provides information to vehicle DSRC systems that alert approaching drivers that individuals are in the intersection.

CONFIDENTIAL AND PROPRIETARY

Kapsch Group

Kapsch Group is among the most successful technology companies in Austria and a global player in the future-oriented markets of intelligent transportation systems (ITS) and information and communication technology (ICT). Three key entities, Kapsch TrafficCom, Kapsch CarrierCom and Kapsch BusinessCom, form the core of the Kapsch Group. As a family-owned company with its head offices in Vienna, Kapsch has been dedicating itself to the development and implementation of new technologies to the benefit of its customers since 1892. Kapsch makes a key contribution to shaping a mobile and interconnected world in a responsible manner through a range of innovative services and solutions. The subsidiaries of Kapsch Group employ around 6,800 personnel at their facilities and sales offices around the world.

Kapsch. challenging limits.

>>> www.kapsch.net

xxxxxxx-0000-000-EN-USA

Kapsch TrafficCom North America | 8201 Greensboro Drive, Suite 1002 | McLean, VA 22102
T +1 703 885 1976 | F +1 703 790 9100
ktc.na@kapsch.net | www.kapsch.net

CONFIDENTIAL AND PROPRIETARY

Figure 46: Heads-Up Display Specification

Heads-Up Display (HUD)
Hardware Specifications
BM-HUD-2001/2

BRANDMOTION
safer cars today

Features

- Viewing Angle optimized for mounting/driver position.
- Sunlight Readability. glare, direct or indirect sun. Contrast Ratio: 5:1
- Fully transparent image projected into the distance
- Ambient Light Sensor: adjustable dim light to brightest sunny day
- Dimmable display with on/off brightness control.
- Display size: typical 3" X 5"

Communication / Input Ports (Option 1 - video or 2 - Digital)

- RS232 for commands, updates, setup. User Friendly, option 1 or 2
- USB (option 2) for command messages, update, setup.
- CAN with Micro-SD for image uploading. option 2
- Integrated Amplified Speaker with audio input jack input.

Power

- Input Voltage: 9 - 16 VDC.
- Max current: 2 A continuous.
- Key-off Max current draw <50 ma.
- Reverse battery protected. Fuse protection.

Environmental/Other

- Operating Temp. Range: -20° to +75° C.
- Storage Temperature: -30° to +85° C.
- Humidity Operating: up to 95% RH.
- Sun Loading - Screen: 12hrs continuous with no display degradation
- Meet Automotive EMC Standards
- Weight: less than 1.5 lbs.
- Packaging envelope: 6.5 x 4 x 4 inches

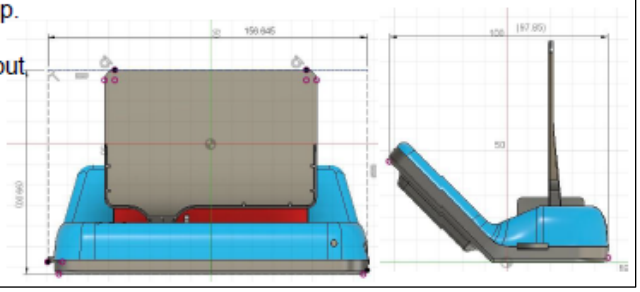

Confidential revision 1.2

Figure 47: Rear-View Mirror Specification

Rear View Mirror (RVM)
Hardware Specifications
BM-RVM-FLTW-XX

BRANDMOTION
safer cars today

Features

- Connected Vehicle Warnings (e.g. Wrong Way Entry shown below).
- Multiple options for OEM vehicle features (e.g. Auto Dim, OnStar).
- Customizable:
  - Vehicle/Project Display
  - Mirror is capable of displaying either a single camera feed on its bright 7.3" LCD screen, or dual camera views in split screen mode on two 3.6" side-by-side screens.

Options

- OEM: Compass, temperature, OnStar functionality.
- 4.3" color backup monitor displays.
- Compatible with all standard backup cameras.
- Integrated Amplified Audio Speaker (custom).

Power

- Input Voltage: 9 - 16 VDC.
- Reverse battery protected, Fuse protection.

Environmental/Other

- Meets standard automotive environmental requirements and mounting.
- Meets standard automotive package standards and FMVSS display area requirements.
- Weight: less than 1.5 lbs.

Confidential revision 1.1

Appendix G. Version History

Table 15: Version History

Version Number	Date	Author(s), Agency	Summary of Changes
0.1	5/8/19	WSP	Initial Version for Stakeholder Review
0.2	5/24/19	WSP	Draft update, Stakeholder comments addressed
1.0	5/28/18	WSP	Final Version of Draft

THE CITY OF
COLUMBUS
ANDREW J. GINTHER, MAYOR